INTRODUCTION TO ROTOR DYNAMICS

- *Critical Speed and Unbalance Response Analysis* -

E. J. Gunter, Ph.D.
Fellow, ASME

RODYN Vibration Analysis, Inc.
1932 Arlington Boulevard, Suite 223
Charlottesville, VA 22903-1560

October 2001

1 INTRODUCTION

Rotating machinery such as compressors, turbines, pumps, jet engines, turbochargers, etc., are subject to vibrations. These vibrations are broadly classified as synchronous(due to unbalance) or nonsynchronous such as caused by self excited rotor whirling. The three major areas of concern are rotor critical speeds, system stability and unbalance response. Critical speeds are the undamped natural frequencies of the rotor system. As a first step in turborotor design, an analysis is performed to determine the system critical speeds, mode shapes and energy distribution. The evaluation of the bearing strain energy, for example, can give us important insight as to whether we may expect to encounter stability and unbalance response problems for a particular mode. Usually the critical speeds are desired to be 10% to 20% above or below the operating speed range. However, there are many rotors that operate on top of the second critical speed due to sufficient bearing damping. Often attempts to elevate the 2nd critical speed by increased bearing stiffness leads to serious 1st mode stability problems.

When bearing and seal damping is included, we can compute the damped natural frequencies or complex eigenvalues of the system. The real part of the complex eigenvalue determines the modal log decrement. From this quantity we can evaluate the stability margin and compute the rotor critical speed amplification factors. If the log dec is positive, the system is stable for that mode. If the log dec is > 2, then there will be little unbalance excitation.

The rotor unbalance response represents the rotor synchronous excitation due to rotor unbalance, shaft bow or disk skew. The ***DYROBES*** program is capable of computing the rotor response due to these various excitation mechanisms. Under certain bearing or support conditions, the rotor response may be nonlinear. This is caused by nonlinear squeeze film dampers, rolling element bearings, or fluid film bearings with high unbalance. With some nonlinear effects, it is necessary to compute the time transient motion of the system. ***DYROBES*** may be used for time transient torsional as well as lateral response.

In this presentation, some of the basic features of ***DYROBES*** will be presented starting with an introduction to rotor dynamics by first presenting an analysis of the single mass flexible rotor referred to as the Jeffcott rotor. The rotor model will then be extended to include damped bearings and flexible supports. Analytical expressions are presented for this model for the computation of the critical speed, log dec and rotor response obtained for the rotor critical speeds. The ***DYROBES*** program will be used to illustrate the characteristics of the extended Jeffcott rotor on flexible supports and more complex rotors.

Although the presentation is based on the simple Jeffcott rotor, the concepts are applicable to multi-mass rotors which operate below the second critical speed. Examples are given here to illustrate the use of the single mass results to industrial machines.

2 JEFFCOTT ROTOR

2.1 Jeffcott Rotor Description

Figure 2.1 represents the single-mass Jeffcott rotor mounted on a uniform massless elastic shaft. The rotor mass **M** is considered as concentrated at the rotor center. The mass center of the rotor is displaced from the rotor elastic axis by the distance e_u.

The rotor equations of motion may be expressed in terms of the Cartesian coordinates of the elastic axis *(X, Y)* or by using the polar coordinates Z and 0. At zero speed, the point C lies along the origin of the coordinates.

The complex amplitude **Z** is

$$Z = X + iY = \textit{Complex Rotor Displacement} \tag{2.1-1}$$

with amplitude A and phase angle θ relative to the x axis

$$A = |Z| = \textit{Rotor Amplitude} \tag{2.1-2}$$

$$\theta = \arctan(Y/X) = \textit{Rotor Phase Angle}$$

The phase angle is taken as a phase lag so it appears after the reference mark passes.

A reference mark is placed on the shaft in order to determine phase. This may be a slot cut in the shaft or another mark on the shaft. In rotating machinery operations, instrumentation called a key phasor locates this reference mark. The displacement phase angle is measured relative to the key phasor ϕ rather than to the positive x axis θ.

$$\phi = \textit{Phase Angle Relative to the Key Phasor}$$

The relative phase angle is commonly measured as a phase lag so that the reference mark passes the key phasor before the rotor. This phase angle is much more useful because it rotates with the shaft. It will be used from now on.

Example 2.1 ***Rotor Amplitude and Phase Angle***

> ***Given***: Consider a rotor mass with geometric center located at C, as shown in Fig. 2.2. The end view shows the displacement located so that displacement probes would measure the horizontal and vertical displacements at
>
> **X = 1 mil = 0.001 in (0.0254 mm)**
>
> **Y = -2 mil = -0.002 in (-0.0508 mm)**
>
> These values are at a given time t_0.

Objective: Find the complex vector ***Z***, the magnitude *A*, and phase angle θ of the displacement. Also determine the phase angle ϕ_2 relative to the key phasor if the reference mark is at 135 degrees.

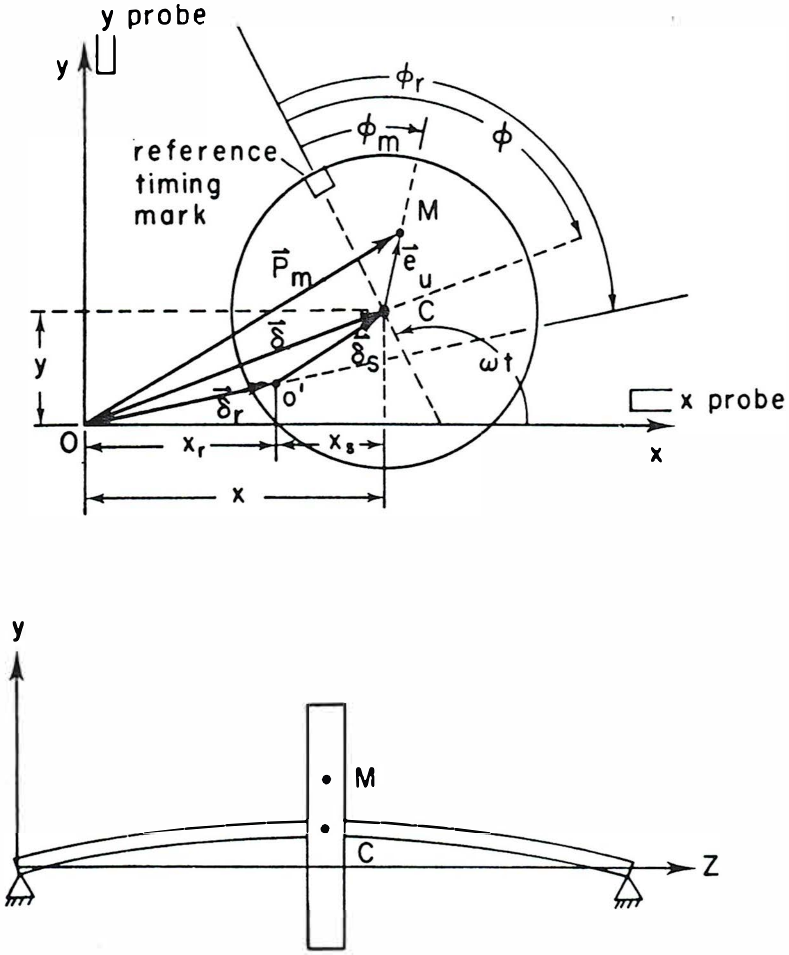

Figure 2.1 Single Mass Jeffcott Rotor on Rigid Supports

The Jeffcott rotor as shown in Figure 2.1 has the disk mounted at the center span of the uniform shaft. The shaft mass may be included in this analysis by placing ½ of the total shaft mass as acting at the disc center. This assumption is accurate to < 1% error regardless of the size of the shaft.

In the Jeffcott model, the moments of inertia Ip and It are not considered. This is because there are no gyroscopic moments exerted on the shaft. The disc is assumed to move in a plane that is perpendicular to the shaft spin axis. For large multi-stage compressors and turbines, in which the disks are inboard, there is little gyroscopic moment effects exerted on the first critical speed.

In the Jeffcott rotor, the bearings are considered as rigid. Since there is no bearing asymmetry, the rotor motion is circular synchronous due to unbalance. The maximum motion occurs at the rotor center and zero motion is encountered at the bearings. A similar circumstance is often encountered with multi-stage compressors with tilting pad bearings under high preload. High motions may occur at the rotor center with little motion observed at the bearings

Objective: Find the complex vector Z, the magnitude A, and phase angle θ of the displacement. Also determine the phase angle ϕ_2 relative to the key phasor if the reference mark is at 135 degrees.

Solution:

The magnitude is

$$A = |Z| = \sqrt{X^2 + Y^2} = \sqrt{(1)^2 + (-2)^2}$$

$$A = 2.24\ mils = 0.00224\ inches\ (0.0569 mm)$$

and the phase angle relative to the x axis as

$$\theta = \arctan(Y/X) = \arctan(-2/1) = 296\ degrees$$

The complex vector Z may be written in cartesian coordinates as

$$Z = 1 - 2i\ (mils)$$

or in polar coordinates as

$$Z = 2.24\ (\cos 296° + i \sin 296°)$$

or in the exponential form as

$$Z = 2.24\ e^{i\,296°}\ mils\quad (0.0569\ e^{i\,296°}\ mm)$$

Figure 2.2 illustrates the results. The reference mark is at 135 degrees. Thus the phase angle ϕ relative to the key phasor is

$$\phi = 135° + (360° - 296°) = 201\ degrees$$

In Figure 2.2, assume that noncontact probes are located at the X and Y axes. The relative phase angle of the X probe with respect to the key phasor mark would be a log angle of 135° and the Y axis probe would record a log angle of 45°.

2.2 Mass and Unbalance

The rotor disk has weight W and disk (rotor) mass

W = Disk Weight
$M = W/g$ = *Disk Mass*

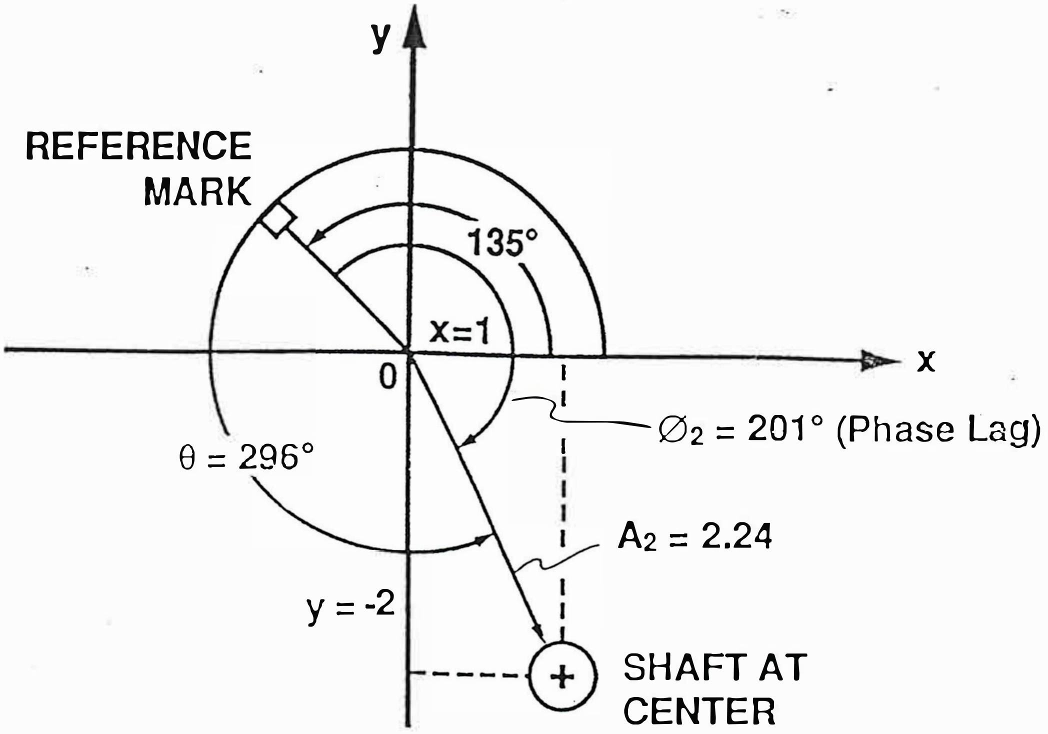
y
REFERENCE
MARK
135°
x=1
0
x
$\varnothing_2$ = 201° (Phase Lag)
θ = 296°
A2 = 2.24
y = -2
SHAFT AT
CENTER

Figure 2.2 Cartesian and Polar Representations of Displacement

The mass center located at point M is different from point C, which is the shaft centerline.

An unbalance occurs when the rotor mass center M does not lie along the axis of rotation C of the rotor, as illustrated in Fig. 2.1. A single radial force is produced by rotation of the rotor. The unbalance may be detected statically (without rotation) if the rotor is placed on supports with sufficiently low friction. The unbalance will cause the rotor to rotate so that the mass center moves towards its lowest point. Figure 2.3 shows the rotor with unbalance in the downward position.

The actual unbalance U of the mass is

$$U = \textit{Rotor Mass Unbalance} = W_u\, R_u$$

where U represents a small weight W_u placed at a certain distance R_u away from the geometric center C. In an industrial rotor, the actual unbalance is always unknown. It is usually measured in terms of units such as oz-in, gram-in, or gram-mm. It also has an angle relative to the reference mark. For the analysis here it is assumed that the reference mark is aligned with the unbalance vector. This is done without any loss in generality. Then the displacement phase angle ϕ_2 is relative to the unbalance vector.

In rotor vibration analysis, the unbalance eccentricity is defined as the distance between the rotor mass center M and the mass geometric center C.

$$e_u = \textit{Unbalance Eccentricity}$$

The rotor mass has weight W. Then the unbalance eccentricity is given by

$$e_u = U/W \quad ; \quad \frac{e_u}{R_u} << 1 \tag{2.2-1}$$

The unbalance eccentricity is used to make the results of the vibration analysis dimensionless.

It is also of interest to evaluate the force exerted on the shaft by the unbalance. Let the shaft rotate with angular velocity ω rad/sec. The force exerted on a rigid shaft is

$$F_u = m\, e_u\, \omega^2 = \textit{Unbalance Force} \tag{2.2-2}$$

where

$M = W/g = \textit{Rotor Mass}$

$\omega = \textit{Shaft Angular Velocity (rad/sec)}$

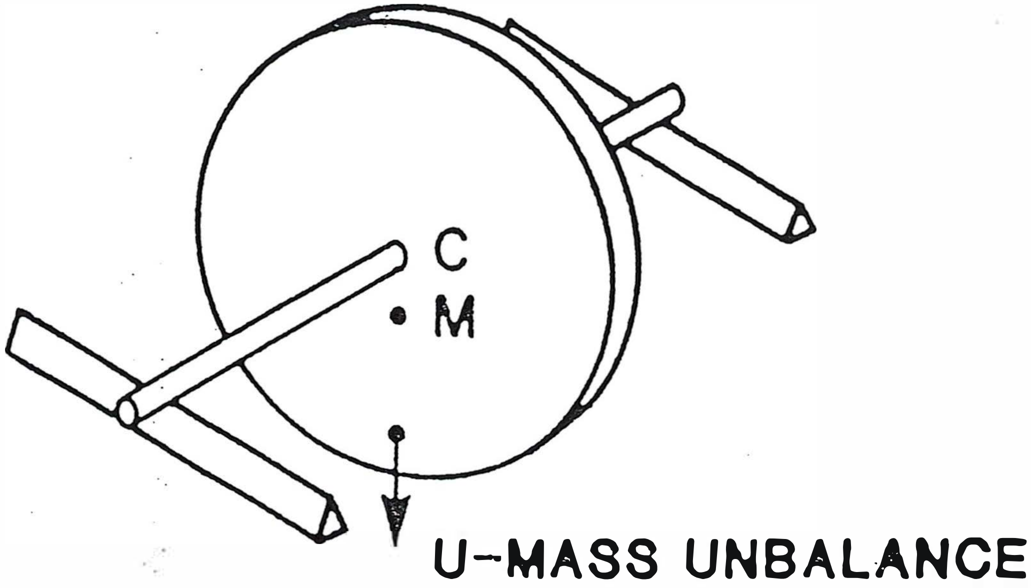
C
M
U-MASS UNBALANCE

Figure 2.3 Single-Mass Jeffcott Rotor Supported on Knife Edges Showing Static Equilibrium Positions

This force rotates with the shaft. Normally N is used to denote shaft speed in RPM.

Example 2.2 ***Rotor Unbalance Eccentricity and Force***

Given: A rotor mass has an unbalance of

$$U = 10 \text{ oz-in } (7.064 \text{ N-mm})$$

and a weight of

$$W = 500 \text{ lbf } (2{,}225 \text{ N})$$

The rotor speed is $N = 8{,}000$ *RPM*.

Objective: Find the unbalance eccentricity e_u, shaft angular velocity ω and rotating force on a rigid rotor F_u.

Solution: The unbalance response eccentricity is (2.2)

$$e_u = U/W = 10 \ oz\text{-}in \times 1 \ lbf/16 \ oz \ \times 1500 \ lbf$$
$$e_u = 0.00125 \ in = 1.25 \ mils \ (0.0318 \ mm)$$

The rotor mass is

$$m = W/g = 500 \ lbf \times \frac{1}{386} \frac{\sec^2}{in}$$

$$m = 1.295 \ \frac{lbf\text{-}\sec^2}{in} \quad (227 \ kg)$$

The angular velocity is

$$\omega = \frac{N \ 2\pi}{60} = 8{,}000 \ rev/min \times min/60 \sec \times 6.28 \ rad/rev = 837.7 \ rad/sec$$

and the force F_u *is (2.3)*

$$F_u = m \, e_u \, \omega^2 = 1.295 \times 0.00125 \times (837.7)^2$$
$$F_u = 1{,}135 \ lbf \ (5050 \ N)$$

It is easily seen that the rotating unbalance force can be quite large.

2.3 Shaft Stiffness

The shaft exerts a force F_k on the mass displaces an amount Y_2 as shown in Fig. 2.4. From

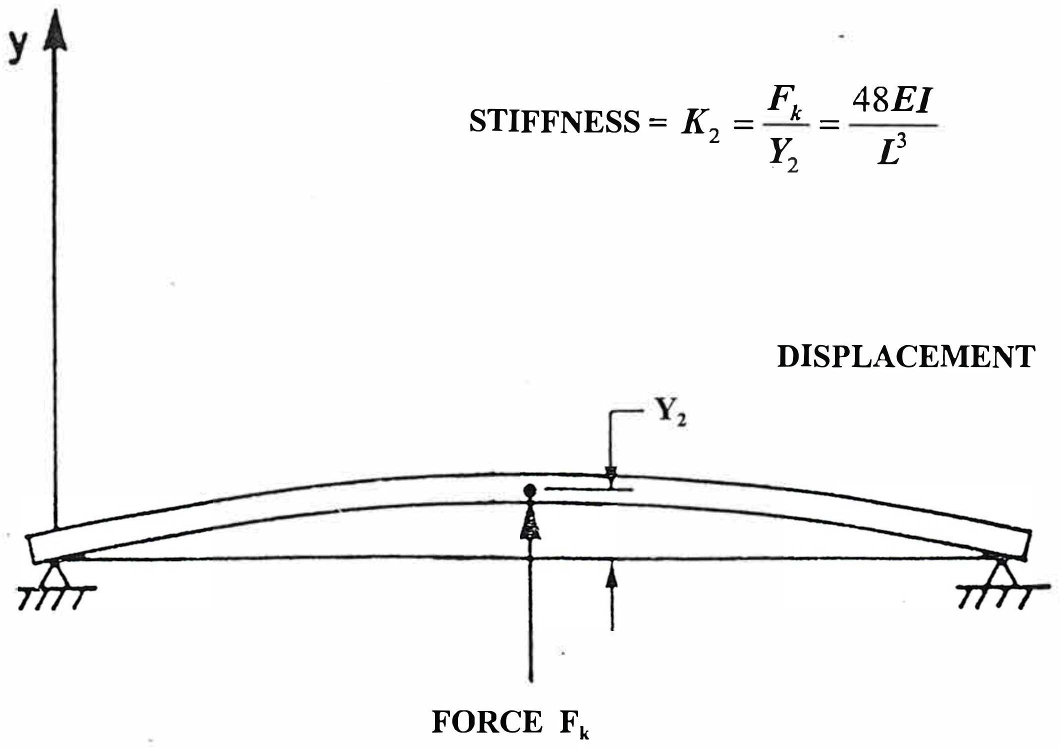
y
STIFFNESS = $K_2 = \frac{F_k}{Y_2} = \frac{48EI}{L^3}$
DISPLACEMENT
Y_2
FORCE F_k

Figure 2.4 Force and Displacement of Uniform Shaft in Bending

uniform beam theory on pinned supports, the displacement is related to the force by

$$Y_2 = -48EI/L^3 F_k \qquad (2.3\text{-}1)$$

where
E = *Young's Modulus*
I = *Area Moment of Inertia*
L = *Length Between Bearings*

The shaft is circular with diameter D

D = *Shaft Diameter*

and the area moment of inertia is then

$$I = \pi D^4/64 \qquad (2.3\text{-}2)$$

again from elementary theory. The shaft stiffness K_2 is given by

K_2 = *Shaft Stiffness* = $-F_k/Y_2$ = *-Force/Displacement*

or from (2.2-1)

$$K_2 = 48EI/L^3 \qquad (2.3\text{-}3)$$

This is easily calculated for a particular shaft.

As indicated in the introduction, rotating machinery which is centrally mounted between the bearings and reasonably uniformly distributed along the shaft may also be modeled with this formula for stiffness. Figure 2.5 shows a six-stage compressor which will be used as an example.

Example 2.3 ***Stiffness of Six-Stage Compressor***

Given: A six-stage compressor, shown in Fig. 2.5, has all of the stages located between the bearings and is fairly uniform along the shaft. The rotor has the properties

D = *159 mm (6.25 in)*
L = *1.72 m (67.8 in)*
E = *207,000 N/mm^2 (3 x 10^7 lbf/in^2)*

Here, the effective diameter is taken as the average of the diameter at the bearings, 4.5 inches, and the largest shaft diameter of 8.0 inches. The shaft is made of steel. The total shaft length is 2.23 m (87.7 in).

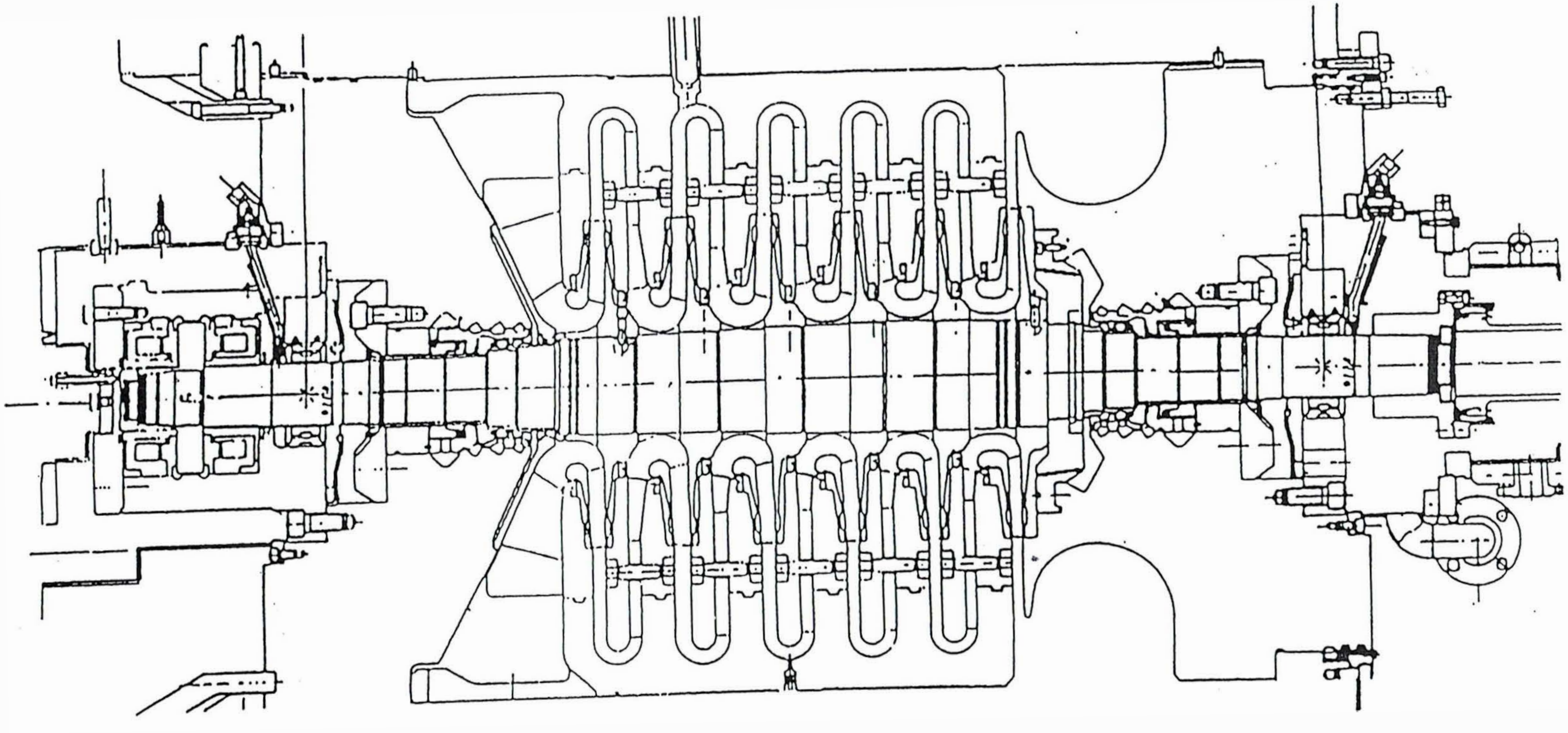

Figure 2.5 Shaft Parameters and Geometry For Six-Stage Compressor

Figure 2.6 Schematic Drawing of Six-Stage Compressor

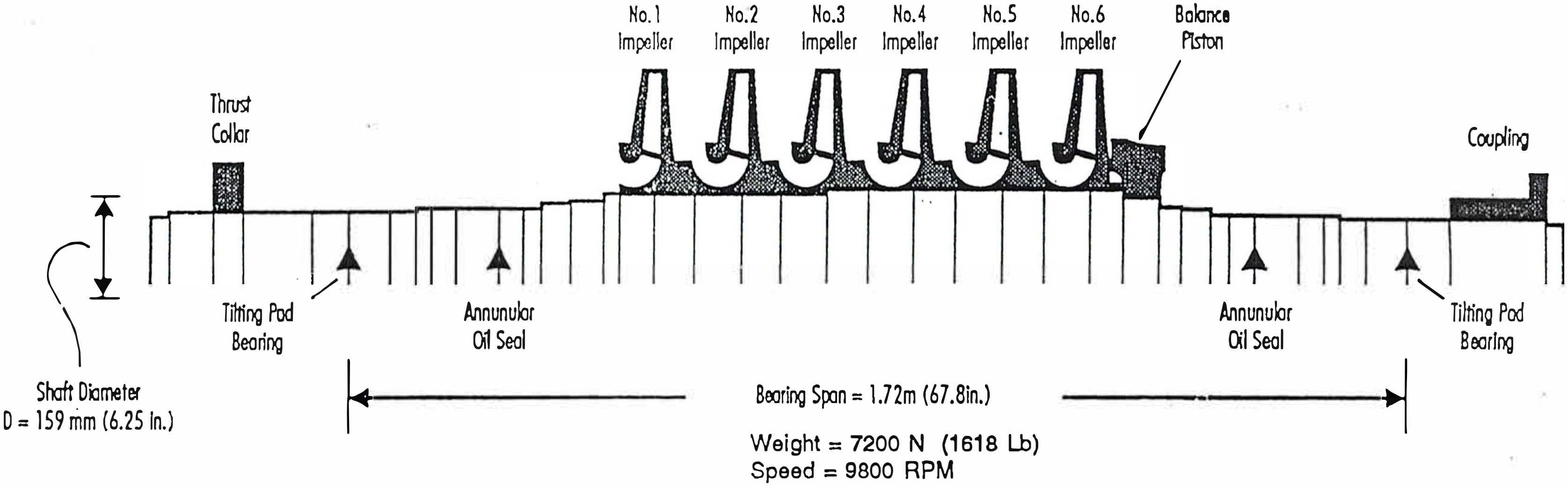
No. 1 Impeller
No. 2 Impeller
No. 3 Impeller
No. 4 Impeller
No. 5 Impeller
No. 6 Impeller
Balance Piston
Thrust Collar
Coupling
Tilting Pad Bearing
Annunular Oil Seal
Annunular Oil Seal
Tilting Pad Bearing
Shaft Diameter
D = 159 mm (6.25 In.)
Bearing Span = 1.72m (67.8in.)
Weight = 7200 N (1618 Lb)
Speed = 9800 RPM

Shaft Parameters and Geometry for Six Stage Compressor

Objective: Determine the shaft stiffness K_2.

Solution: The area moment of inertia is from (2.5)

$$I = \pi D^4/64 = 3.14 \times (159)^4 \ mm^4 \times 1/64$$

$$I = 3.12 \times 10^7 \ mm^4 \ (74.9 \ in^4)$$

The shaft stiffness is (2.6)

$$K_2 = 48EI/L^3 = 48 \times 2.07 \times 10^5 \ N/mm^2 \times 3.12 \times 10^7 \ mm^4 \times 1/(1720)^3$$

$$K_2 = 60{,}900 \ N/mm \ (348{,}000 \ lbf/in)$$

2.4 Rotor Mass

For a single mass rotor constructed of a disk, the mass is quite easy to obtain from the disk weight W as

$$M = W/g$$

Normally the shaft is assumed to have a small mass compared to the disk and that is neglected.

For centrally mounted industrial rotors, the mass used is called the modal mass

$$M_m = Rotor\ Modal\ Mass$$

It is a quantity defined in a somewhat complicated manner and normally calculated by a rotor dynamics computer program such as ***CRITSPD-PC***. The modal mass for centrally mounted rotors is often found to be approximately 0.55 to 0.65 of the total rotor weight. For example, the modal weight for a uniform beam on simple supports is exactly 0.5 W total.

Let

$$M_m = 0.5 \ W/g \qquad (2.4\text{-}1)$$

This will be employed as a reasonable approximation in these notes. The factor of one-half represents the fact that the rotor center mass vibrates but that the ends do not vibrate very much.

Another useful quantity is the modal weight

$$W_m = Modal\ Weight$$

The approximate formula is

$$W_m = 0.5 \ W \qquad (2.4\text{-}2)$$

where W is the total rotor weight.

Example 2.4 *Modal Mass and Weight of Six-Stage Compressor*

Given: The total rotor weight is

$$W = 7200\ N\ (1618\ lbf)$$

Objective: Find the modal mass and weight.

Solution: The modal weight from (2.7) is

$$m_m = 0.5\ W/g = 0.5 \times 7200\ N \times 1/9.8\ sec^2/m \times kg\text{-}m/N\text{-}sec^2$$
$$m_m = 367\ kg$$

Similarly, the modal weight from (2.8) is

$$W_m = 0.5\ W = 3600\ N\ (809\ lbf)$$

2.5 Rotor Damping

There is always a certain amount of damping present in any rotating machine. In this analysis, it is assumed that the damping force F_d is proportional to the rotor velocity Y_2.

$$F_d = C_2 \dot{Y}_2 \tag{2.5-1}$$

where

C_2 = Rotor Damping

Usually, the rotor damping is fairly small compared to bearing damping.

2.6 Rotor Equations

Consider the case of a single mass rotor on rigid supports, as shown in Fig. 2.1. It is assumed that the shaft mass is negligible and that shaft properties are the same in both x and y directions. Then the equations of motion can be written as

$$m\ddot{X}_2 + C_2\dot{X}_2 + K_2X_2 = me_u\omega^2 \cos \omega t \tag{2.6-1}$$

$$m\ddot{Y}_2 + C_2\dot{Y}_2 + K_2Y_2 = me_u\omega^2 \sin \omega t \tag{2.6-2}$$

The mass, damping, and stiffness forces on the left must equal the external unbalance forces on the right. Recall that the rotor reference mark is assumed to be aligned with the unbalance, so that there is no phase angle in the unbalance force terms.

With the complex rotor displacement defined in (2.1), these equations combine to yield

$$m\ddot{Z}_2 + C_2\dot{Z}_2 + K_2 Z_2 = m e_u \omega^2 e^{i\omega t} \tag{2.6-3}$$

Now the critical speeds and unbalance response can be evaluated.

2.7 Undamped and Damped Critical Speeds

A. Frequency Equation

First consider free vibrations where the external forces (unbalance) are zero. The critical speeds are

ω_{cr} = *Undamped Critical Speed*
ω_{dr} = *Damped Critical Speed*

Here the "r" denotes rigid bearings. Set the forcing term on the right side of (2.12) to zero

$$m_2\ddot{Z}_2 + C_2\dot{Z}_2 + K_2 Z_2 = 0 \tag{2.7-1}$$

Assume a solution of the form

$$Z_2 = Z_2 e^{\lambda t}$$

where

Z_2 = *Complex Amplitude*
λ = *Eigenvalue (Critical Speed)*

Then (2.13) reduces to

$$(m\lambda^2 + C_2\lambda + K_2)\, Z_2 = 0$$

A solution, other than the trivial solution of $Z_2 = 0$, exists only if the expression in brackets vanishes so

$$m\lambda^2 + C_2\lambda + K_2 = 0$$

This is called the ***frequency equation***. The solution to the frequency equation is

$$\lambda = -\frac{C_2}{2m} \pm \sqrt{\left(\frac{C_2}{2m}\right)^2 - \left(\frac{K_2}{m}\right)} \tag{2.7-2}$$

There are two eigenvalues.

2.7.2. Undamped Eigenvalues

Now consider the undamped critical speeds. If the rotor is undamped, $C_2=0$ and the eigenvalues become

$$\lambda = \pm i\sqrt{\frac{K_2}{m}} \tag{2.7-3}$$

Both eigenvalues are purely imaginary. Define the undamped critical speed as

$$\omega_{cr} = \sqrt{\frac{K_2}{m}} \tag{2.7-4}$$

The eigenvalues are then called forward and backward

$$\lambda_1 = +\, i\omega_{cr} = \textit{Forward Undamped Critical Speed}$$
$$\lambda_2 = -\, i\omega_{cr} = \textit{Backward Undamped Critical Speed}$$

Usually only the forward eigenvalue is important for rotor dynamics. Normally it is desired to have the critical speeds at least 15% away from the machine operating speed range.

The undamped critical speed on rigid bearings is often expressed in terms of the modal weight W_m from Eq. (2.8) as

$$\omega_{cr} = \sqrt{\frac{K_2 g}{W_m}} \tag{2.7-5}$$

Note that this does not take into account bearing stiffness, which may substantially reduce the actual critical speed.

For rotating machines, it is desired to not have a critical speed in the operating speed range. Let the critical speed margin be

$$\lambda_{margin} = \textit{Critical Speed Margin} = |\, \lambda_{op} - \lambda_{cr} \,|$$

where

$$\lambda_{op} = \textit{Operating Speed}$$

A good estimate of the value for the critical speed margin is

$$\lambda_{margin} \geq 0.015\, \lambda_{cr}$$

or 15% of the critical speed. Thus the critical speed should be either 15% below the lowest machine operating speed or 15% above the highest machine operating speed.

Example 2.5 Undamped Critical Speed of Six-Stage Compressor

Given: Consider the same six-stage compressor as in Examples 2.3 and 2.4. The rotor stiffness and modal weights were calculated in these examples as

K_2 = 60,900 N/mm (348,000 lbf/in)
W_m = 3600 N (809 lbf)

The compressor operating speed is

$$\lambda_{op} = 9800 \text{ RPM}$$

Objective: Find the undamped critical speed and compare to the measured critical speed (peak response). Also find the critical speed margin.

Solution: Eq. (2.18) gives the undamped critical as

$$\omega_{cr} = \sqrt{\frac{K_2 g}{W_m}} = \left[60{,}900\ \frac{N}{mm}\ x\ 9800\ \frac{mm}{\sec^2}\ x\ \frac{1}{3600N}\right]^{1/2}$$

with the result

$$\omega_{cr} = 407 \text{ rad/sec}$$

Converting to revolutions per minute (N_{cr})

$$N_{cr} = 407 \text{ rad/sec x 60 sec/min x 1/6.28 rev/rad}$$
$$N_{cr} = 3890 \text{ rpm}$$

Figure 2.6 shows the vibration test results for the six-stage compressor. The critical speeds are

Calculated Undamped Critical Speed	Measured Peak Response Speed
3890 rpm	3700 rpm

The calculated undamped critical is about 6% over the measured value.

(Now the calculated critical speed will be used to determine the critical speed margin. Eq. (2.7-6) gives

$$|\ \omega_{op} - \omega_{cr}\ | = |9800 - 3890 \qquad (2.7\text{-}6)$$

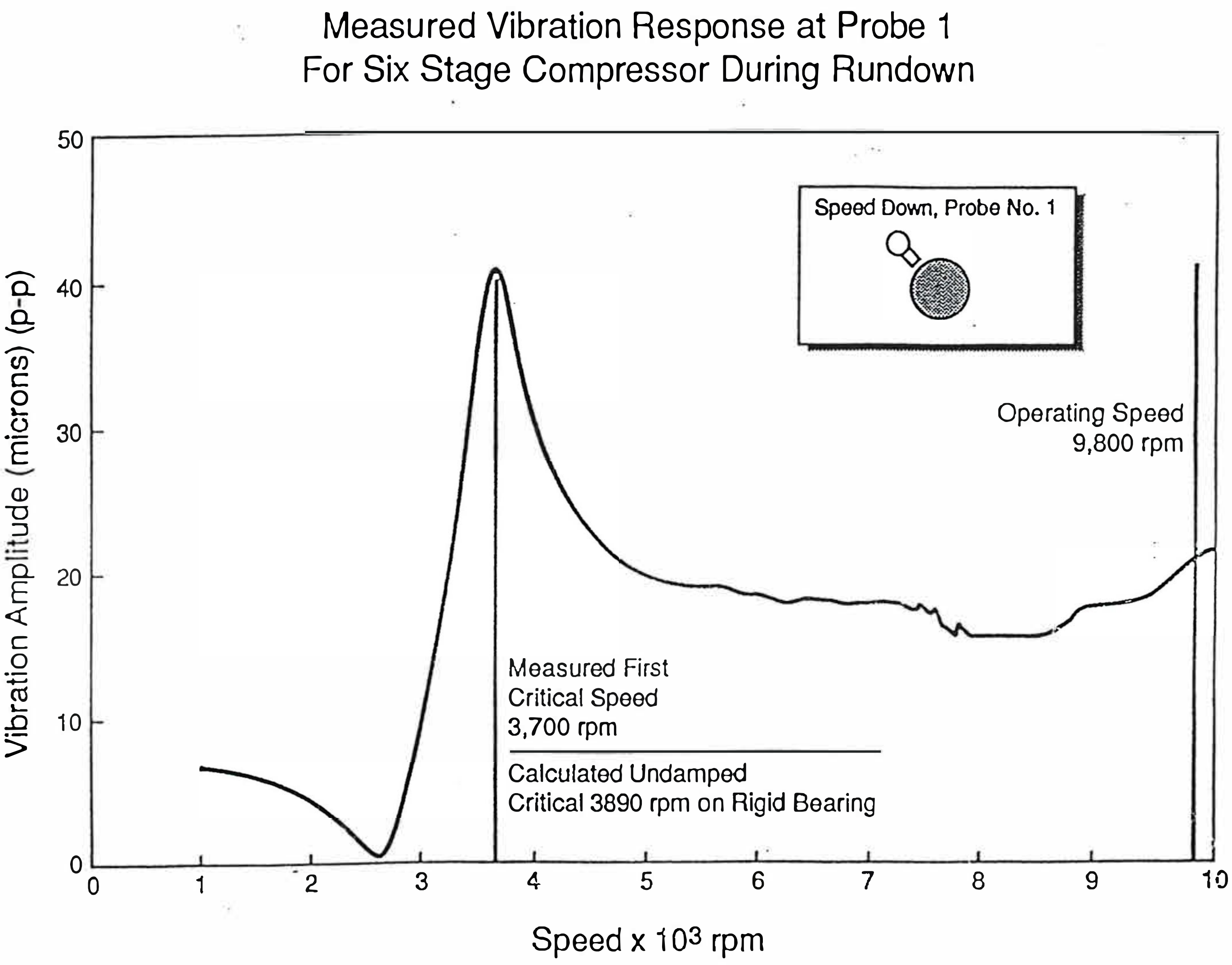

Figure 2.6 Measured Vibration Response at Probe 1 for Six-Stage Compressor During Run Down With Shaft Bow and Unbalance

and a margin of 160%. Clearly there is no critical speed problem with this compressor for the first critical speed.

2.7.3. Damped Eigenvalues

Next consider the damped critical speeds. For convenience, define the damping ratio ξ_2

$$\xi_2 = \text{Damping Ratio}$$

in the standard manner for vibrations as

$$\xi_2 = \frac{C_2}{2\sqrt{K_2 m}} = \frac{C_2}{2m\omega_{cr}} \tag{2.7-7}$$

The damped eigenvalues are

$$\lambda_1 = -\xi_2\omega_{cr} \pm i\,\omega_{cr}\sqrt{1 - \xi_2^2} \tag{2.7-8}$$

If the damping ratio ξ_2 is one, the rotor is critically damped, and no oscillations take place. For an industrial rotor it is usually desired to have damping ratio of 0.10 or more near a critical speed.

The two damped eigenvalues have the form

$$\lambda_1 = p + i\,\omega_{dr} = \textit{Forward Damped Eigenvalue}$$

$$\lambda_2 = p - i\,\omega_{dr} = \textit{Backward Damped Eigenvalue}$$

where

$$p = -C_2/2m_2 = -\omega_{cr}\,\xi_2 = \textit{Growth Factor} \tag{2.7-9}$$

$$\omega_{dr} = \omega_{cr}\sqrt{1 - \xi_2^2} = \textit{Damped Eigenvalue} \tag{2.7-10}$$

The growth factor, p, determines whether the vibration will grow with time, be constant, or decrease with time.

$p > 0$, Increasing Vibration - unstable system
$p = 0$, Constant Vibration - undamped system on threshold of instability
$p < 0$, Decreasing Vibration - damped system - stable

Figure 2.7 represents the rotor transient motion with stable, neutral, and unstable values of p.

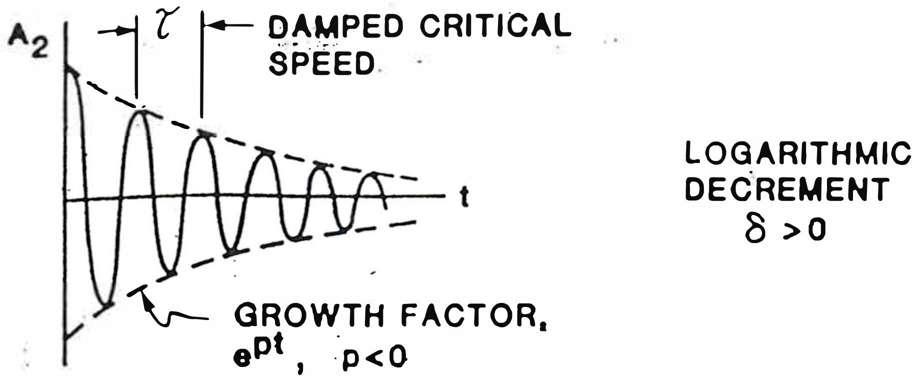
A2
τ
DAMPED CRITICAL SPEED
t
LOGARITHMIC DECREMENT
δ > 0
GROWTH FACTOR,
e^{pt}, p<0

(a) STABLE MOTION: AMPLITUDE DECAYS WITH TIME

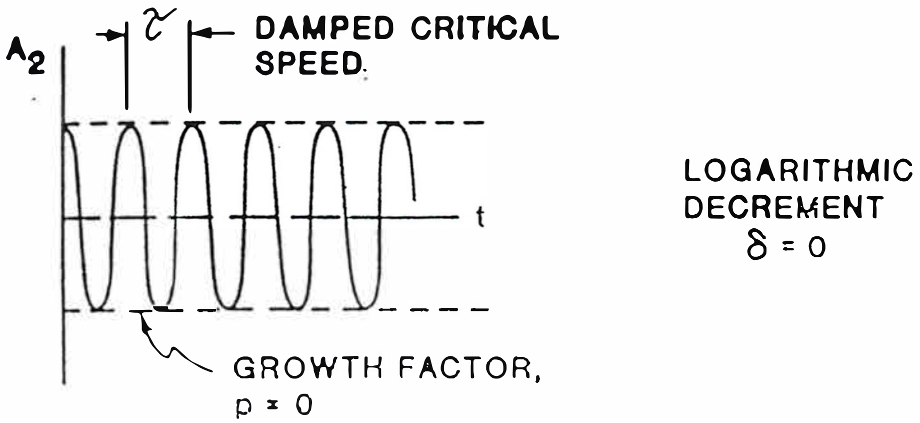
A2
τ
DAMPED CRITICAL SPEED
t
LOGARITHMIC DECREMENT
δ = 0
GROWTH FACTOR,
p = 0

(b) INSABILITY THRESHOLD: AMPLITUDE NEITHER DECAYS NOR GROWS WITH TIME

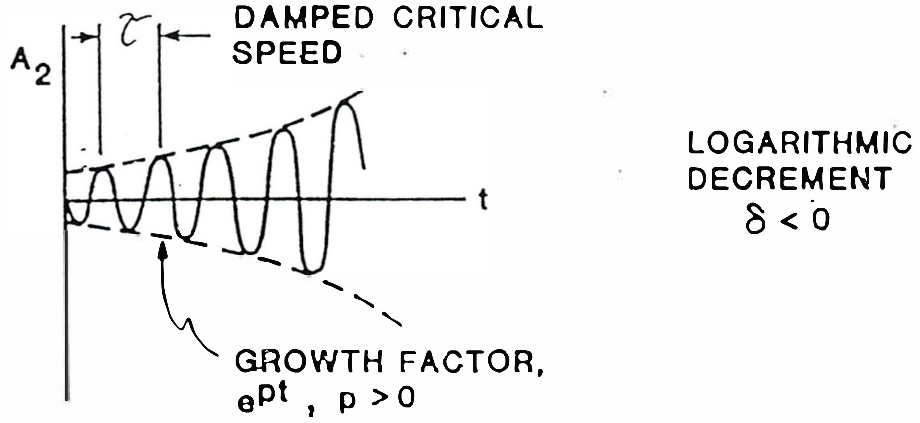
A2
τ
DAMPED CRITICAL SPEED
t
LOGARITHMIC DECREMENT
δ < 0
GROWTH FACTOR,
e^{pt}, p > 0

(c) UNSTABLE MOTION: AMPLITUDE GROWS WITH TIME

Figure 2.7 Vibration Pattern with Damped Critical Speeds

The damped critical speed is slightly less than the undamped critical speed. Again, only the forward eigenvalue is normally observed in rotor dynamic vibrations.

Recall that the assumed form of the vibration is

$$\boldsymbol{Z}_2 = Z_2\, e^{\lambda t} = Z_2\, e^{pt \pm i\omega t} \tag{2.7-11}$$

In sinusoidal form this is

$$\boldsymbol{Z}_2 = Z_2\, e^{pt} \,(\cos \omega_{dr} t \pm i \sin \omega_{dr} t)$$

Figure 2.7 illustrates the vibration patterns. The period of the damped oscillation is

$$\tau = 2\,\pi/\omega_{dr} = \mathit{Period} \tag{2.7-12}$$

These results are well known for free vibrations.

2.7.4 Logarithmic Decrement

Another useful quantity used in rotor dynamics is the logarithmic decrement

$$\delta = \text{Logarithmic Decrement}$$

It is defined as the natural logarithm of the ratio of any two successive amplitudes.

$$\delta = \ln \frac{|Z_2|_t}{|Z_2|_{t+\tau}} \tag{2.7-13}$$

Vibration texts show that this can also be expressed as

$$\delta = -\frac{2\,\pi p}{\omega_{dr}}$$

It represents a dimensionless measure of the rotor vibration decreasing with time. Eqs. (2.7-9) and (2.7-10) give expressions for p and ω_{dr}

$$\delta = -\frac{2\pi\,(-\,\omega_{cr}\,\xi_2)}{\omega_{cr}\sqrt{1 - \xi_2^{\,2}}}$$

with the result

$$\delta = 2\pi \frac{\xi_2}{\sqrt{1 - \xi_2^{\,2}}} \tag{2.7-14}$$

Often ξ_2 is small, so the log decrement may be approximated as

$$\delta = 2\pi\xi_2 \tag{2.7-15}$$

for rotors operating near or above the first bending critical speed. The rotor amplification factor at the critical speed is given by

$$A_c = \frac{1}{2\xi_2} = \frac{\pi}{\delta}$$

for small values of the log decrement.

A damping ratio of $\xi_2 = 0.10$ correspond to a logarithmic decrement value of $\delta = 0.628$ near a critical speed and an amplification factor of 5. This corresponds to a ratio of successive amplitudes equal to 0.534. Note that for industrial rotating machine vibration analyses, this value must include all important effects such as bearings, seals, and so on.

2.7.5 Summary Tables

A summary of the important parameters for undamped and damped critical speeds (eigenvalues) is presented in Table 2.1. These may be used to model some centrally mounted turbomachines. Table 2.2 gives desirable values of a single mass rotor parameters for low vibration levels.

Example 2.6 ***Damped Critical Speed of Six-Stage Compressor***

> ***Given***: The six-stage compressor of several previous examples is assumed to have a rotor damping coefficient of
>
> $$C_2 = 4.0\ \textit{N-sec/mm}\ (22.8\ \textit{lbf-sec/in})$$
>
> As noted, the rotor damping is quite small for rotating machines, so this value is considered typical. Most of the damping comes from the bearings, as will be seen in a later example in the next section.

Table 2.1 Undamped and Damped Critical Speeds For Single Mass Rotor On Rigid Bearings

I. Undamped Critical Speeds - Eigenvalues

$$\lambda_1 = +i\omega_{cr} \quad , \quad \lambda_2 = -i\omega_{cr}$$

$$\omega_{cr} = \sqrt{K_2/m} = \mathit{Undamped\ Critical\ Speed}$$

II. Damped Critical Speeds - Eigenvalues

$$\lambda_1 = p + i\omega_{dr} \quad , \quad \lambda_2 = p - i\omega_{dr}$$

$$p = -\omega_{cr}\,\xi_2 = \mathit{Growth\ Factor}$$

$$\omega_{dr} = \omega_{cr}\sqrt{1 - \xi_2^{\,2}} = \mathit{Damped\ Critical\ Speed}$$

$$\xi_2 = C_2/2\,m\,\omega_{cr} = \mathit{Damping\ Ratio}$$

$$\delta = -2\pi p/\omega_{dr} = 2\pi\,\xi_2 = \mathit{Logarithmic\ Decrement}$$

Table 2.2 Desirable Rotor Dynamic Properties Near Critical Speeds For A Single Mass Rotor on Rigid Bearings

I. Undamped Critical Speeds

$\dfrac{\omega_{margin}}{\omega_{cr}} \geq 15\%$ (Operating Speed 15% Away From Critical Speed)

II. Damped Critical Speeds

$\xi_2 \geq 0.10$ (Damping Ratio Greater Than 0.10), $A_c \leq \dfrac{1}{2\,\xi_2} = 5$

$\delta \geq 0.628$ (Logarithmic Decrement Greater Than 0.628), $A_c \leq \dfrac{\pi}{\delta}$

Objective: Determine the damping ratio ξ_2, growth factor p, damped critical speed ω_{dr}, damped eigenvalues λ_1 and λ_2, and the logarithmic decrement δ for this compressor.

Solution: The damping ratio ξ_2 is given by Eq. (2.20) as

$$\xi_2 = \frac{C_2}{2m\,\omega_{cr}} = 4.0\,\frac{N\text{-sec}}{mm}\ x\ \frac{1}{2}\ x\ \frac{1}{367\ kg}$$
$$x\ \frac{1}{407}\ \frac{\text{sec}}{rad}\ x\ \frac{kg\text{-}m}{N\text{-sec}^2}\ x\ \frac{1000\ mm}{m}$$

with the result

$$\xi_2 = 0.013$$

This is a very low value of damping ratio.

Evaluating the growth factor p and damped critical speeds ω_{dr} from Eqs. (2.22) and (2.23) yields

$$p = -\omega_{cr}\,\xi_2 = -\ 407\ rad/\text{sec}\ x\ 0.013 = -5.5\ rad/\text{sec}$$
$$\omega_{dr} = \omega_{cr}\sqrt{1 - \xi_2^2} = 407\ rad/\text{sec}\ x\ \sqrt{1 - (0.013)^2}$$
$$= 407\ rad/\text{sec} = 3{,}890\ rpm$$

The damped critical speed is equal to the undamped critical speed to three decimal places. The damped eigenvalues are

$$\lambda_1 = -\ 5.5 + i\,407\quad,\quad \lambda_2 = -5.5 - i\,407$$

for this compressor.

The logarithmic decrement is given by Eq. (2.28) as

$$\delta = 2\,\pi\,\xi_2 = 6.28\ (0.013) = 0.083$$

It is small, as expected.

2.8 Unbalance Response

2.8.1 Vibration Amplitude and Phase Angle

Now consider the forced vibration of the rotor due to unbalance. Recall that the single mass rotor on rigid bearings has the rotor mass M_2 at an eccentricity e_u away from the geometric center. The equation (2.6-3)

$$m\,\ddot{Z}_2 + C_2\,\dot{Z}_2 + K_2 Z_2 = m\,e_u\,\omega^2 e^{i\omega t} \qquad (2.8\text{-}1)$$

The unbalance term on the right produced forced, rather than free vibration.

Assume a solution of the form

$$\mathbf{Z}_2 = Z_2\,e^{i\omega t}$$

where

$\mathbf{Z}_2$ = Complex Amplitude
ω = Shaft Angular Velocity

Then the equation becomes

$$(-m\,\omega^2 + i\,C_2\,\omega + K_2)\,Z_2 = m\,e_u\,\omega^2 \qquad (2.8\text{-}2)$$

where the exponential term has been canceled from both sides.

Solving for Z_2 yields

$$Z_2 = \frac{m\,e_u\,\omega^2}{K_2 - m\omega^2 + i\,C_2\,\omega} \qquad (2.8\text{-}3)$$

This is the desired unbalance response amplitude. A more convenient form can be found.

Define the frequency ratio *f* as

$$f = \omega/\omega_{cr} = \text{Frequency Ratio}$$

The dimensionless amplitude is

$$\frac{Z_2}{e_u} = \frac{f^2}{1 - f^2 + i\,2f\,\xi_2} \qquad (2.8\text{-}4)$$

Also, the absolute amplitude A_2 is

$$A_2 = |Z_2| = \text{Absolute Amplitude}$$

Evaluating the magnitude of Equation (2.32) produces

$$\frac{A_2}{e_u} = \frac{f^2}{\left[(1 - f^2)^2 + 4\,\xi_2^2 f^2\right]^{1/2}} \qquad (2.8\text{-}5)$$

This is the dimensionless disk amplitude of motion as a function of f and ξ_2. The phase angle ϕ_2 is

ϕ_2 = Phase Angle of Shaft Motion Relative to the Reference Mark

Evaluating the phase angle from Equation (2.32) yields

$$\phi_2 = \arctan \left[\frac{2f\xi_2}{1 - f^2} \right] \tag{2.8-6}$$

These are two very important parameters.

2.8.2 Unbalance Response Plots

Figure 2.8 plots the amplitude ratio A_2/e_u vs. frequency ratio f for various values of rotor damping ratio ξ_2. Damping ratios above 0.5 represent sinusoidally varying vibrations while those below are critically damped.

$\xi_2 < 0.5$	Sinusoidal Oscillations
$\xi_2 = 0.5$	Critically Damped
$\xi_2 > 0.5$	Over Damped

For industrial rotors operating above the first critical speed, damping ratios are usually in the range of 0.0625 to 0.5.

The corresponding phase angles ϕ_2 vs. frequency ratio f are shown in Fig. 2.9. All damping ratios give a phase angle of 90° at a frequency ratio of unity. However, as the damping ratio increases, the change in phase angle is more rapid as the rotor goes through the critical speed.

2.8.3 Peak Vibration

At the peak of the vibration due to unbalance, the frequency ratio f is close to unity

$$f \cong 1.0, \quad \xi_2 < 0.2$$

for damping ratios ξ_2 less than about 0.2. These are the vibration problems of interest for rotating machines so this will be taken as the case here. Then the amplitude and phase angle, from Eqs. (2.8-5) and (2.8-6), are

$$\left.\begin{aligned} \frac{A_2}{e_u} &\cong \frac{1}{2\xi_2} \\ \phi_2 &\cong 90^\circ \end{aligned}\right\} \quad \begin{aligned} &\textit{At Peak Response} \\ &\textit{Speed } (f \cong 1,\ \xi_2 < 0.2) \end{aligned} \tag{2.8-7}$$

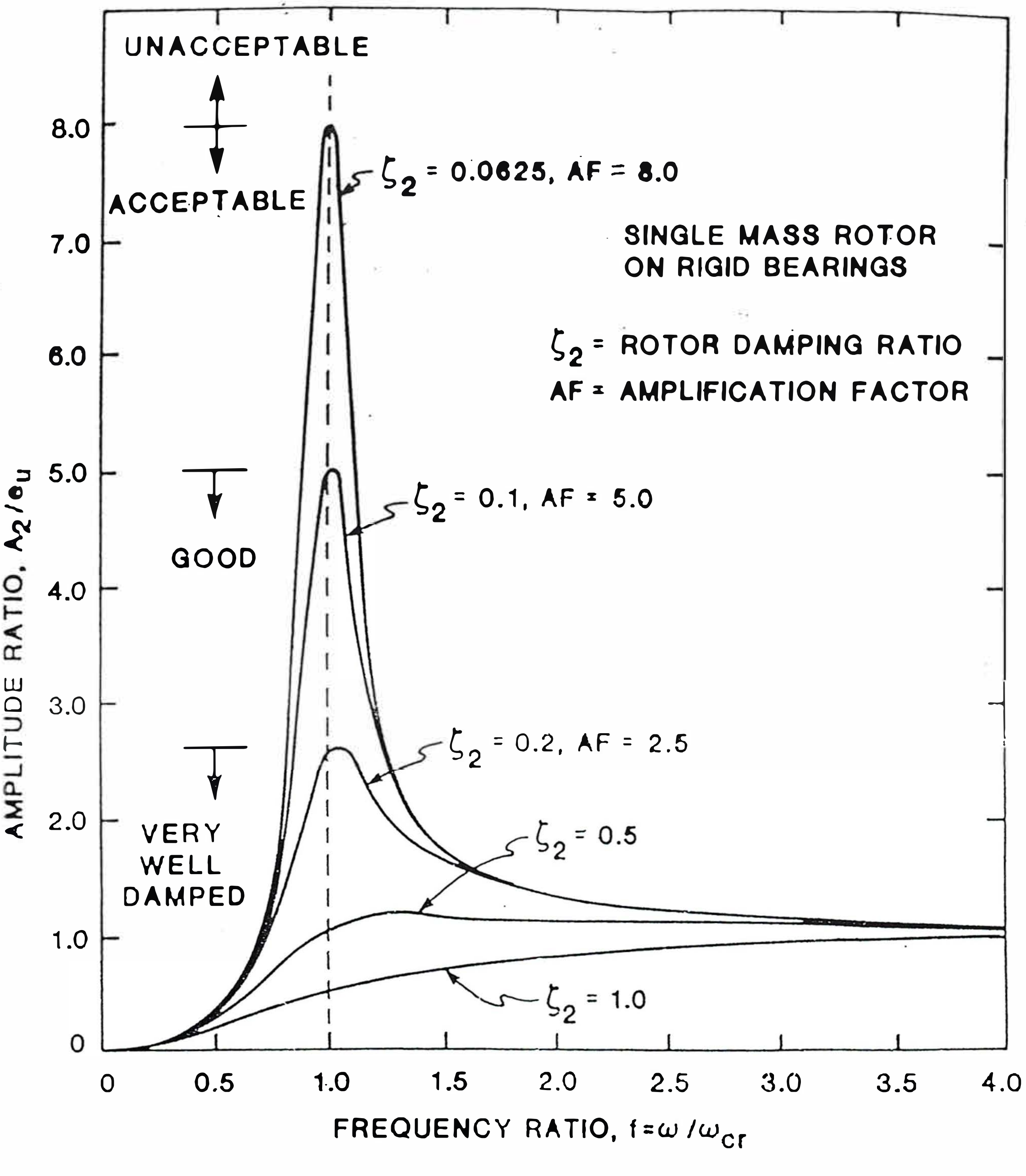

Figure 2.8 Jeffcott Rotor Dimensionless Amplitude vs. Frequency Ratio for Various Values of Rotor Damping ξ

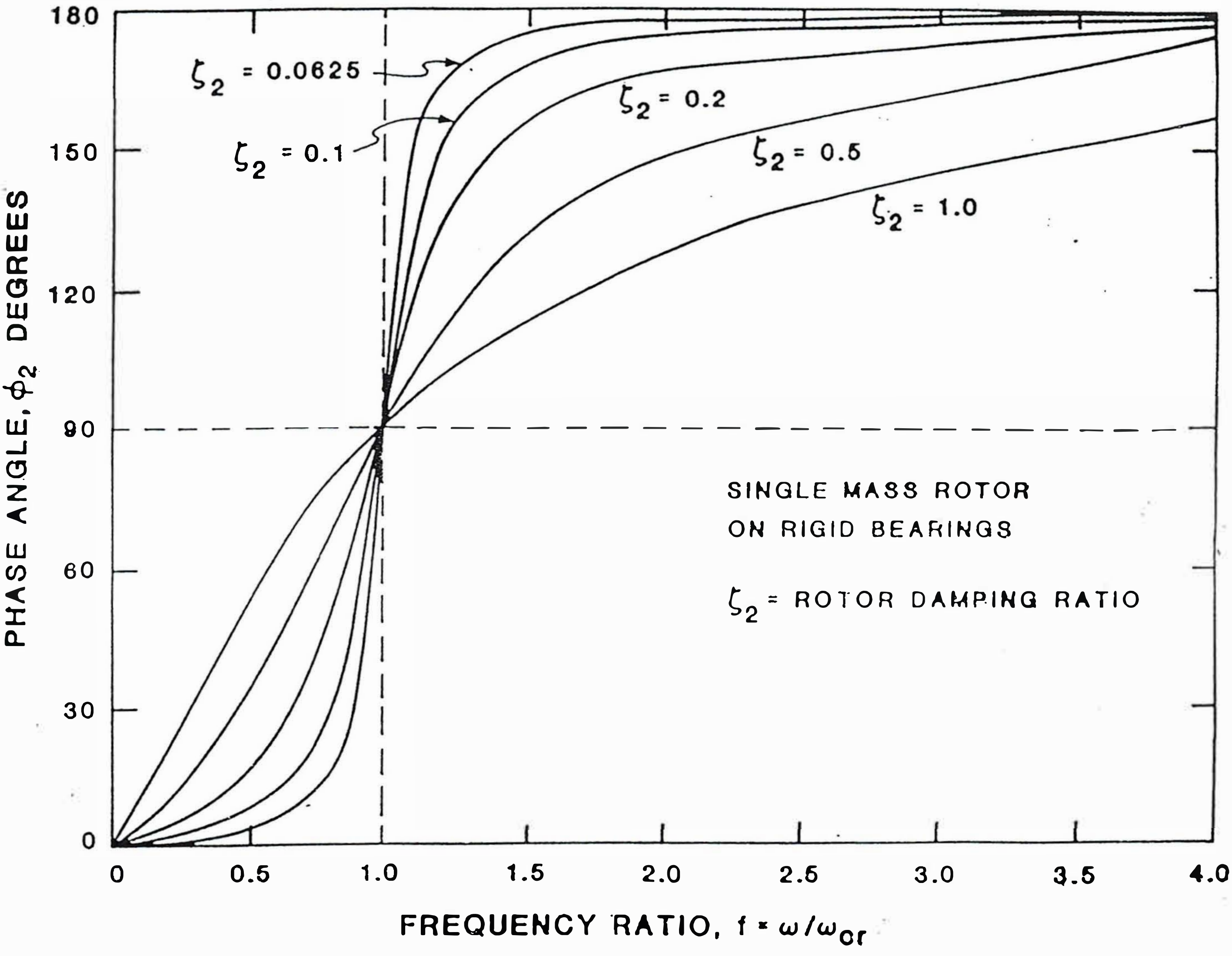

Figure 2.9 Jeffcott Rotor Phase vs. Frequency Ratio for Various Values of Rotor Damping ξ

This is a rather good approximation for many industrial rotors.

The speed at which the peak response occurs ω_{ur}

ω_{ur} = Unbalance Critical Speed

can be found by differentiating Eq. (2.33) A_2/e_u with respect to f and setting it equal to zero. Solving for the speed yields

$$\omega_{ur} = \frac{\omega_{cr}}{\sqrt{1-2\xi_2^{\,2}}} \tag{2.8-8}$$

The unbalance critical speed occurs at values slightly higher than the undamped critical speeds.

2.8.4 Sharpness of Resonance - Amplification Factor

An important parameter describing rotor unbalance response is the amplification factor A_c

A_c = Amplification Factor

It is a measure of the sharpness of the resonance and is often also called the Q factor.

$A_c = Q =$ Q Factor

This is a commonly employed measure in rotor dynamics so it will be discussed here in some detail.

For a single mass rotor, the amplification factor is defined as the peak response amplitude divided by the high speed response amplitude

These amplitudes are given by Eqs. (2.8-7) and (2.8-5)

$$\begin{aligned} \left(\frac{A_2}{e_u}\right)_{peak} &\cong \frac{1}{2\xi_2} \quad (\xi_2 < 0.2) \\ \left(\frac{A_2}{e_u}\right)_{high\ speed} &= 1 \end{aligned} \tag{2.8-9}$$

with the result

$$A_c = Q \cong \frac{1}{2\xi_2} \quad (\xi_2 < 0.2) \tag{2.8-10}$$

The amplification factor can either be defined in this manner or using the half power points for measured data as discussed in Section 4.

Some particular values for amplification factor have been found useful as guidelines. These are

$A_c > 8$	**Undesirable**
$8 \geq A_c > 5$	Acceptable
$5 \geq A_c > 2.5$	Good
$2.5 \geq A_c$	Very Well Damped

If A_c is greater than 8, the machine should either be redesigned or very carefully analyzed to determine if a problem exists. Amplification factors between 8 and 5 are generally considered acceptable. Below values of 5, the machine is considered very good. In the case of a rotor critical speed found to have an amplification factor below 2.5, it may often be assumed that the critical speed is so well damped it may even be in the machine operating speed range.

2.8.5 Summary Tables

Table 2.3 gives a summary of the important unbalance response parameters. Peak values are particularly important. Table 2.4 gives desirable rotor dynamic properties for the amplification factor. Note that these are for a single mass rotor on rigid bearings. Significant changes occur due to bearing effects as discussed in the next section.

Example 2.7 ***Unbalance Response of Six-Stage Compressor***

Given: The six-stage compressor from previous examples has an unbalance level of

$$U = 10 \text{ N-mm } (1.4 \text{ oz-in})$$

acting at the rotor center.

Objective: Determine the amplitude ratio A_2/e_u, the unbalance eccentricity, e_u, rotor amplitude A_2, unbalance critical speed ω_{ur}, and amplification factor A_c.

Table 2.3 Unbalance Response For Single-Mass Jeffcott Rotor On Rigid Bearings

I. Unbalance Response

$$A_{ur} = \frac{A_u}{e_u} = \frac{f^2}{\left[(1-f^2)^2 + 4\,\xi_2^2 f^2\right]^{1/2}} = \textit{Amplitude Ratio}$$

II. Peak Response

$$A\ cM\ \frac{A_2}{e_u} = \frac{1}{2\xi_2} = \textit{Amplitude Ratio At Peak}$$

$$\omega_{ur} = \frac{\omega_{cr}}{\sqrt{1 - 2\xi_2^{\,2}}} = \textit{Unbalance Critical Speed}$$

III. Amplification Factor

$$A_c = Q \cong \frac{1}{2\xi_2} = \textit{Amplification Factor}$$

Table 2.4 Recommended Rotor Amplification Factors

Amplification Factor $A_c = Q$	Category	Recommended Action
$A_c > 8$	Undesirable	Machine Redesign or Very Careful Analysis and Testing
$8 \geq A_c > 5$	Acceptable	Some Care Recommended - Insure Critical Speed Margin
$5 \geq A_c > 2.5$	Good	Insure Critical Speed Margin
$2.5 \geq A_c$	Very Well Damped	Not Considered Critical Speed

Solution: The amplitude ratio A_2/e_u given by Equation (2.8-7) at the peak is

$$\frac{A_2}{e_u} = \frac{1}{2\xi_2} = \frac{1}{2(0.013)} = 38$$

The unbalance eccentricity e_u is obtained from Equation (2.2)

$$e_u = \frac{U}{W_m} = 10\ N\text{-}mm\ x\ \frac{1}{3600N} = 0.0028\ mm$$

$$e_u = 0.0028\ mm\ (1.1\ x\ 10^{-4}\ in)$$

where the modal weight is used. Then the predicted rotor amplitude at the mass is

$A_2 = 38\ e_u = 38 \text{ x } 0.0028 \text{ mm}$
$A_2 = 0.106 \text{ mm } (0.004 \text{ in}) \text{ (0-pk)}$

This is much too large for acceptable compressor vibrations. As noted earlier, much of the damping comes from the bearings and these have yet to be included.

The unbalance critical speed is given by Equation (2.36) as

$$\omega_{ur} = \frac{\omega_{cr}}{\sqrt{1 - 2\xi_2^{\,2}}} = 407\ rad/\text{sec}$$

$$x\ \frac{1}{\sqrt{1 - 2(0.013)^2}} = 407\ rad/\text{sec}$$

This is the same as the undamped critical speed due to the low damping.

Evaluating the amplification factor from Equation (2.38)

$$A_c = Q = \frac{1}{2\xi_2} = \frac{1}{2(0.013)} = 38$$

It is the same as the amplitude ratio at the peak.

Tables 2.5 and 2.6 summarize the results.

Table 2.5 Summary Table of Six-Stage Compressor Properties

I. Shaft

D = 165 mm (6.5 in) = Diameter
L = 1.80 M (71.1 in) = Bearing Span
E = 207,000 N/mm (3×10^7 lbf/in) = Young's Modulus
K_2 = 60,900 N/mm (348,000 lbf/in) = Stiffness
C_2 = 4.0 N-sec/mm (22.8 lbf-sec/in) = Shaft Damping

II. Rotor Weight

W = 7200 N (1618 lbf) = Weight
W_m = 3600 N (809 lbf) = Modal Weight

III. Speed

ω_{op} = 9800 rpm = Operating Speed

Table 2.6 Summary of Rotor Dynamic Calculations for Six-Stage Compressor Using Single Mass Rotor on Rigid Bearings

I. Undamped Critical Speed

ω_{cr} = 3800 rpm = Undamped Critical
ω_{op} = 9800 rpm = Operating Speed
Margin = 149%

II. Damped Critical Speed

p = -5.5 rad/sec = Growth Factor
ω_{dr} = 3890 rpm = Damped Critical
ξ_2 = 0.013 = Damping Factor
δ = 0.083 = Logarithmic Decrement

III. Unbalance Response

A_2/e_u = 38 = Amplitude Ratio
e_u = 0.0028 mm (1.1×10^{-4} in) = Unbalance Eccentricity
A_2 = 0.106 mm (0.0004 in) (0-pk) = Amplitude
AF = Q = 38 = Amplification Factor

SECTION 3

FLEXIBLE ROTOR ON FLEXIBLE BEARINGS

3.1 Rotor and Bearing Equations

The previous case of a single-mass rotor on rigid bearings is now extended to the case of flexible bearings. Figure 3.1 shows the geometry of the rotor with the displacements

X_1 = Bearing Horizontal Displacement
Y_1 = Bearing Vertical Displacement
X_2 = Rotor Horizontal Displacement
Y_2 = Rotor Vertical Displacement

Again, complex displacements are used

$Z_1 = X_1 + iY_1$ (Bearing)
$Z_2 = X_2 + iY_2$ (Rotor)

where both rotor and bearing properties are assumed the same in both horizontal and vertical directions.

The bearing properties are defined as

$K_1 = 2K_b$ = Bearing Stiffness
$C_1 = 2C_b$ = Bearing Damping

Here, K_b, C_b are the bearing properties for the total support. It is assumed here that the mass of the bearing housing is small and can be neglected.

The equations of motion are

Bearing

$$C_1\dot{X}_1 + K_1X_1 + K_2(X_1 - X_2) = 0 \tag{3.1}$$

$$C_1\dot{Y}_1 + K_1Y_1 + K_2(Y_1 - Y_2) = 0 \tag{3.2}$$

Shaft

$$m\ddot{X}_2 + K_2\,(X_2 - X_1) = m\,e_u\,\omega^2\cos\omega t \tag{3.3}$$

$$m\ddot{Y}_2 + K_2\,(Y_2 - Y_1) = m\,e_u\,\omega^2\,\sin\,\omega t \tag{3.4}$$

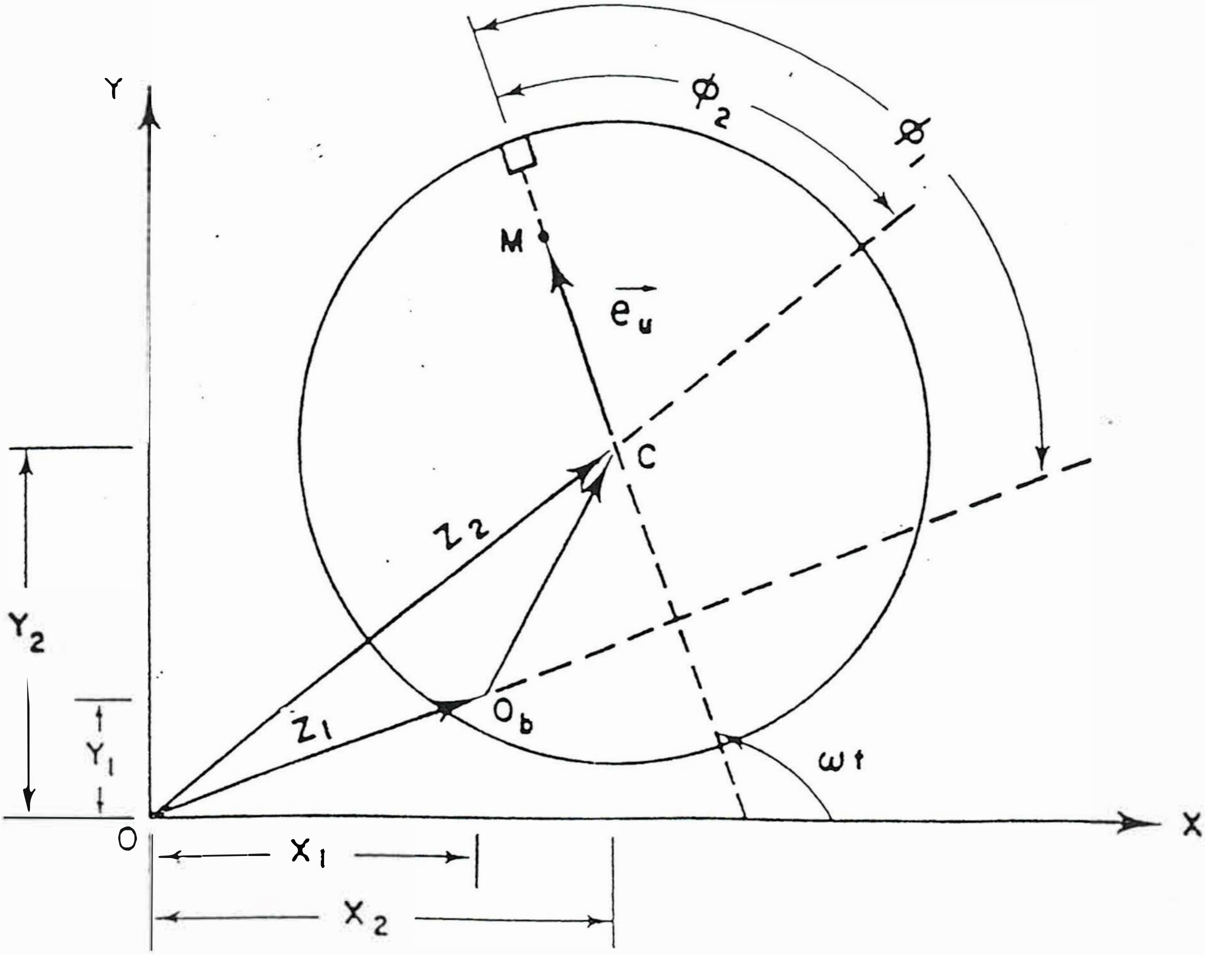
Y
φ
φ2
M
e_u
C
Z2
Z1
Ob
ωt
Y2
Y1
O
X1
X2
X

(a) End View of Rotor Mass

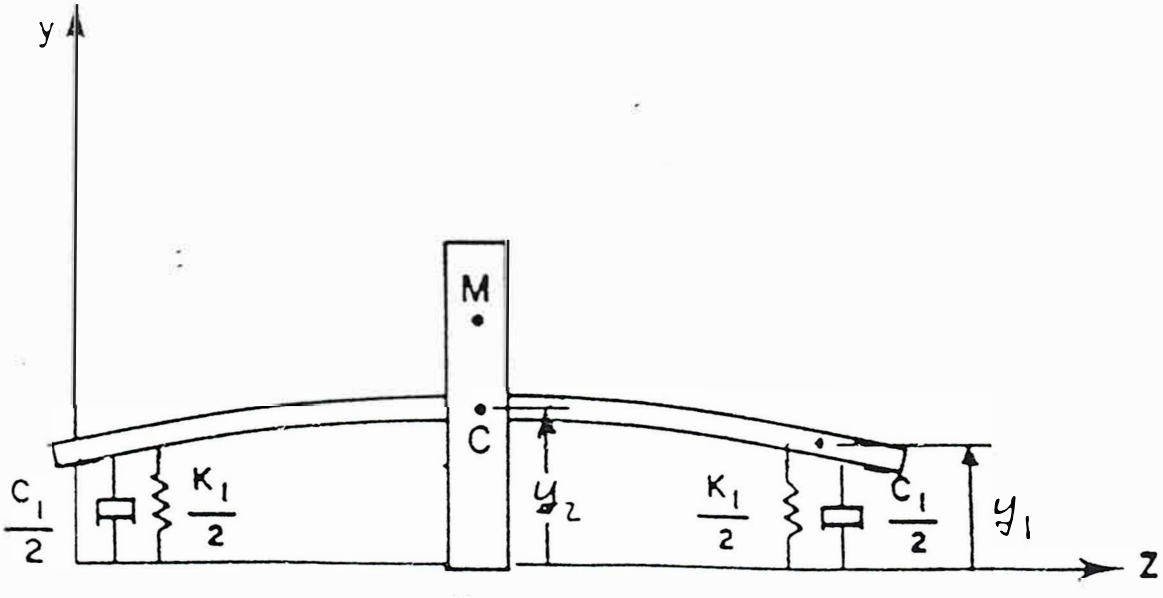
y
M
C
C1/2
K1/2
y2
K1/2
C1/2
y1
Z

(b) Side View of Rotor Displacement

Figure 3.1 Single-Mass Rotor on Flexible Damped Bearings

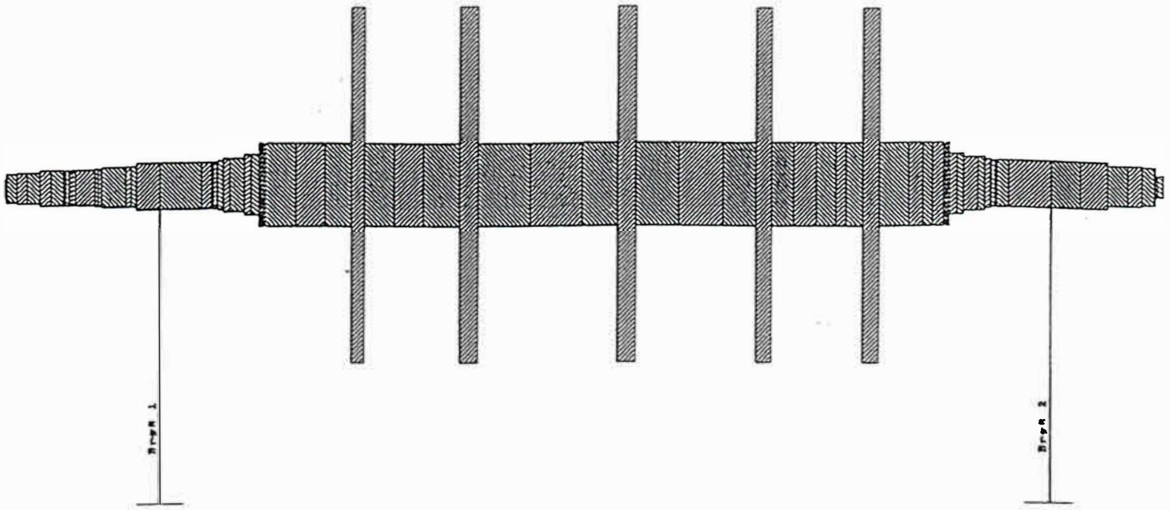

SCHEMATIC REPRESENTATION OF MULTI-MASS TURBOROTOR

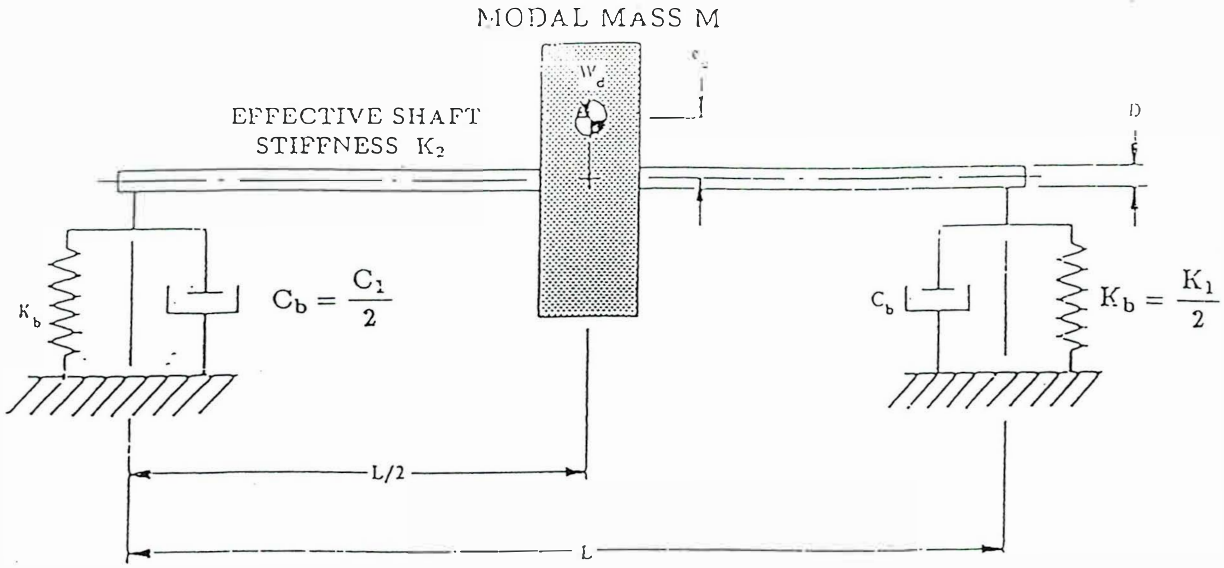
MODAL MASS M
W_d
e
EFFECTIVE SHAFT
STIFFNESS K_2
D
K_b
$C_b = \frac{C_1}{2}$
C_b
$K_b = \frac{K_1}{2}$
L/2
L

Figure 3.1b Single-Mass Rotor on Flexible Damped Bearings

Here, the unbalance is the same as in the previous section. It is located only on the rotor (disk) and is aligned with the reference mark, as shown in Fig. 3.1a. Here, it is also assumed that the rotor damping C_2 is quite small compared to the bearing damping. Thus, it is neglected to simplify the analysis. In complex form, these equations are

$$C_1 \dot{Z}_1 + K_1 Z_1 + K_2 (Z_1 - Z_2) = 0 \tag{3.5}$$

$$m \ddot{Z}_2 + K_2 (Z_2 - Z_1) = m e_u \omega^2 e^{i\omega t} \tag{3.6}$$

Note that this is only possible if the bearing properties are equal (symmetric) in the X, Y directions.

3.2 Undamped and Damped Critical Speeds

A. *Frequency Equation*

Again, both undamped and damped critical speeds are examined.

ω_c = Undamped Critical Speed On Flexible Bearings

ω_d = Damped Critical Speed On Flexible Bearings

The "r" subscript is now dropped because the bearings are no longer rigid.

For free vibrations, the unbalance force terms on the right in Equations (3.5) and (3.6) are set to zero.

$$C_1 \dot{Z}_1 + K_1 Z_1 + K_2 (Z_1 - Z_2) = 0 \tag{3.7}$$

$$M \ddot{Z}_2 + K_2 (Z_2 - Z_1) = 0 \tag{3.8}$$

Assume a solution of the form

$$Z_1 = Z_1 e^{\lambda t} \quad , Z_2 = Z_2 e^{\lambda t}$$

and the equations reduce to

$$(C_1 \lambda + K_1 + K_2) Z_1 - K_2 Z_2 = 0$$

$$(m\lambda^2 + K_2) Z_2 - K_2 Z_1 = 0$$

$$\therefore K = \frac{K_1}{K_2} = \frac{2K_b}{K_2} = \textit{Bearing Stiffness Ratio}$$

Define the dimensionless parameters

$$\omega_{cr} = \sqrt{\frac{K_2}{m}} = \textit{Undamped Critical Speed on Rigid Bearings}$$

$$\xi_1 = \frac{C_1}{2\, m\, \omega_{cr}} = \frac{2C_b}{2m\, \omega_{cr}} = \textit{Bearing Damping Ratio}$$

Rearranging with the result

$$\left[2\,\xi_1\,\omega_{cr}\,\lambda + (1 + K)\,\omega_{cr}^2\right] Z_1 - \omega_{cr}^2 Z_2 = 0$$

$$-\omega_{cr}^2 Z_1 + \left[\lambda^2 + \omega_{cr}^2\right] Z_2 = 0$$

A solution exists for Z_1 and Z_2 only if the determinant of the coefficients vanishes. The determinant yields

$$2\,\xi_1\,\lambda^3 + (1+K)\,\omega_{cr}\,\lambda^2 + 2\,\xi_1\,\omega_{cr}^2\,\lambda + K\omega_{cr}^3 = 0 \tag{3.9}$$

This is called the *frequency equation*. It is cubic for flexible bearings, as compared to quadratic for rigid bearings.

B. Undamped Critical Speed

All of the damping terms vanish and the frequency equation reduces to

$$(1 + K)\,\omega_{cr}\,\lambda^2 + K\omega_{cr}^3 = 0$$

and solving for λ

$$\lambda = \pm\, i\,\omega_{cr}\sqrt{\frac{K}{1+K}}$$

The two eigenvalues are imaginary. Then the undamped critical speed on flexible bearings is

$$\omega_c = \omega_{cr}\sqrt{\frac{K}{1+K}} \tag{3.10}$$

The addition of flexible bearings decreases the undamped critical speed a bit. Figure 3.2 shows the variation with stiffness ratio K.

C. *Damped Critical Speeds*

The damped frequency equation is a third order polynomial which is not easily solved. An approximate solution can be obtained but is omitted here. The solution for the third order polynomial may be obtained using a general matrix program such as ***MATLAB***. For rotors up to five major mass stations, the ***DYROBES*** demo finite element program may also be employed.

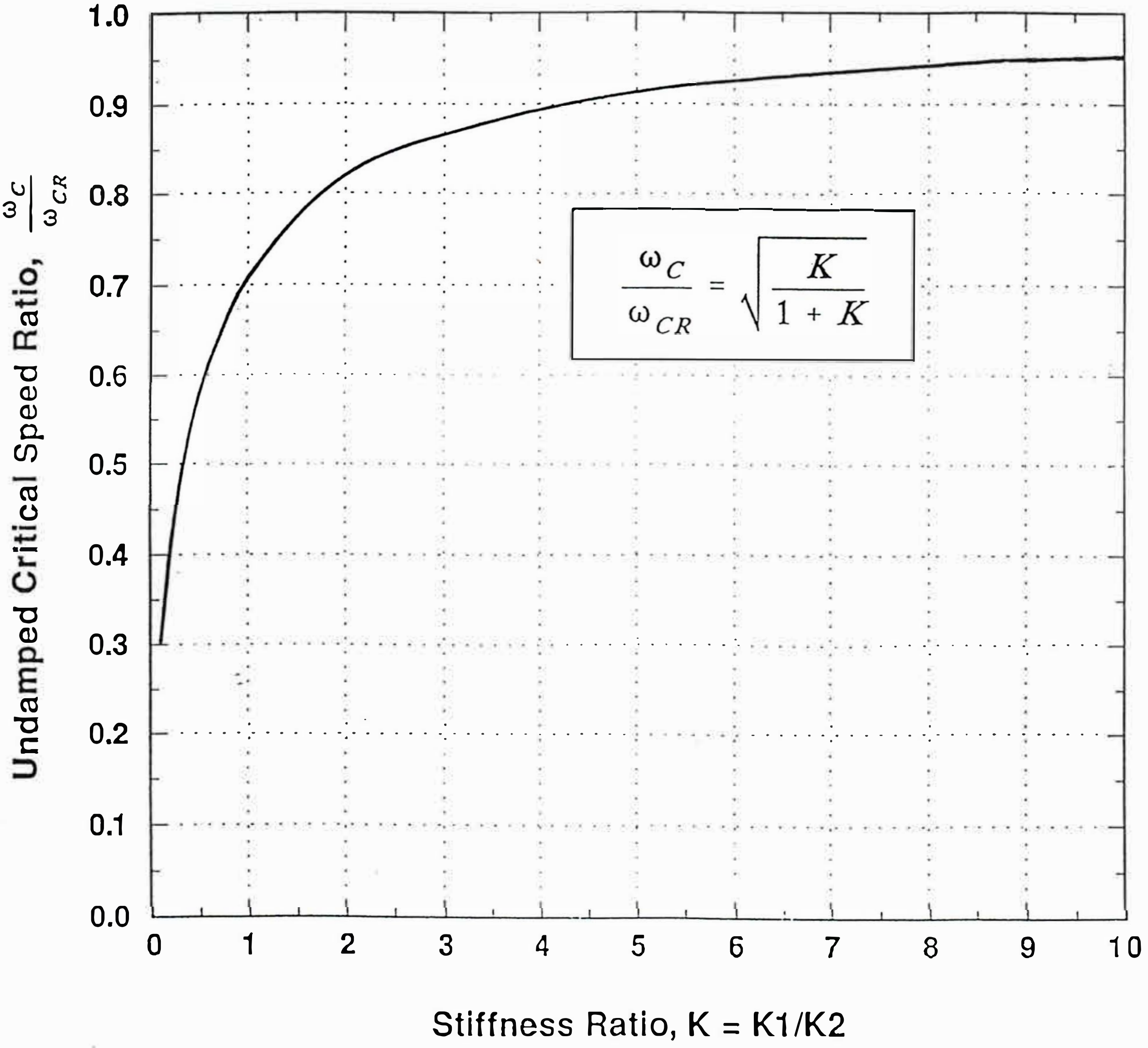

Figure 3.2 Reduction in Undamped Critical Speed Due to Flexible Bearings

Example 3.1 *Undamped Critical Speed of Six-Stage Compressor On Flexible Bearings*

Given: The six-stage compressor has flexible tilting pad bearings with stiffnesses

$$K_{xx} = 140{,}000 \text{ N/mm } (800{,}000 \text{ lbf/in})$$

$$K_{yy} = 180{,}000 \text{ N/mm } (1{,}040{,}000 \text{ lbf/in})$$

evaluated from a suitable tilting pad computer program. Recall that the shaft stiffness and undamped critical on rigid bearings is

$$K_2 = 60{,}900 \text{ N/mm } (348{,}000 \text{ lbf/in})$$

$$\omega_{cr} = 3890 \text{ rpm}$$

Objective: Find the stiffness ratio ***K*** and the undamped critical speed ω_c on flexible bearings.

Solution: The average bearing stiffness is

$$K_b = 1/2\ (140{,}000 + 180{,}000) = 160{,}000 \text{ N/mm}$$

and the stiffness ratio is

$$K = K_1/K_2 = 2K_b/K_2 = 2\ (160{,}000)/60{,}900$$

with the result

$$K = 5.25$$

This is a typical value for compressors. The undamped critical speed is obtained from Equation (3.10) as

$$\omega_c = \omega_{cr} \sqrt{K/1+K}$$

$$= 3890 \sqrt{5.25/1+5.25} = 3890\ (0.92)$$

$$\omega_c = 3560 \ rpm$$

The bearing flexibility reduces the critical to 92% of the rigid bearing case. Recall that the actual critical speed (shown in Figure 2.6) is 3700 rpm. The error in the simple formula is 140 rpm, or less than 4%.

3.3 Unbalance Response

A. Equations of Motion

Now the unbalance response of the rotor in flexible bearings is evaluated. Assume solutions of the form

$$Z_1 = Z_1 e^{i\omega t} \qquad , Z_2 = Z_2 e^{i\omega t}$$

The equations (3.5) and (3.6) become

$$(iC_1 \omega + K_1 + K_2) Z_1 - K_2 Z_2 = 0 \tag{3.11}$$

$$(-m \omega^2 + K_2) Z_2 - K_2 Z_1 = m e_u \omega^2 \tag{3.12}$$

where the exponential term has been canceled.

B. Vibration at Bearings

It is desired to reduce the rotor-bearing system to an equivalent system modeling the vibration at the bearings. This is normally the measured vibration in rotating machinery. Define effective mass and damping acting at the bearings as

m_{1eq} = Equivalent Mass Acting At Bearings

C_{1eq} = Equivalent Damping Acting at Bearings

These two terms allow the reduction of the two degree of freedom system in Z_1 and Z_2 into an equivalent single degree of freedom system in Z_1. Figure 3.3 illustrates.

Solving Eqs. (3.12) for Z_2 yields

$$Z_2 = \frac{K_2}{-m\omega^2 + K_2} Z_1 + \frac{m\, e_u\, \omega^2}{-m\, \omega^2 + K_2}$$

Substituting this into Equation (3.11) gives

$$\left[iC_1\omega + K_1 + K_2 - \frac{K_2^2}{-m\, \omega^2 + K_2} \right] Z_1 = \frac{K_2\, m\, e_u\, \omega^2}{-m\, \omega^2 + K_2}$$

Rearranging all of this and regrouping terms produces the equivalent rotor equation

$$(-m_{1eq}\, \omega^2 + i\, C_{1eq}\, \omega + K_1)\, Z_1 = m\, e_u\, \omega^2 \tag{3.13}$$

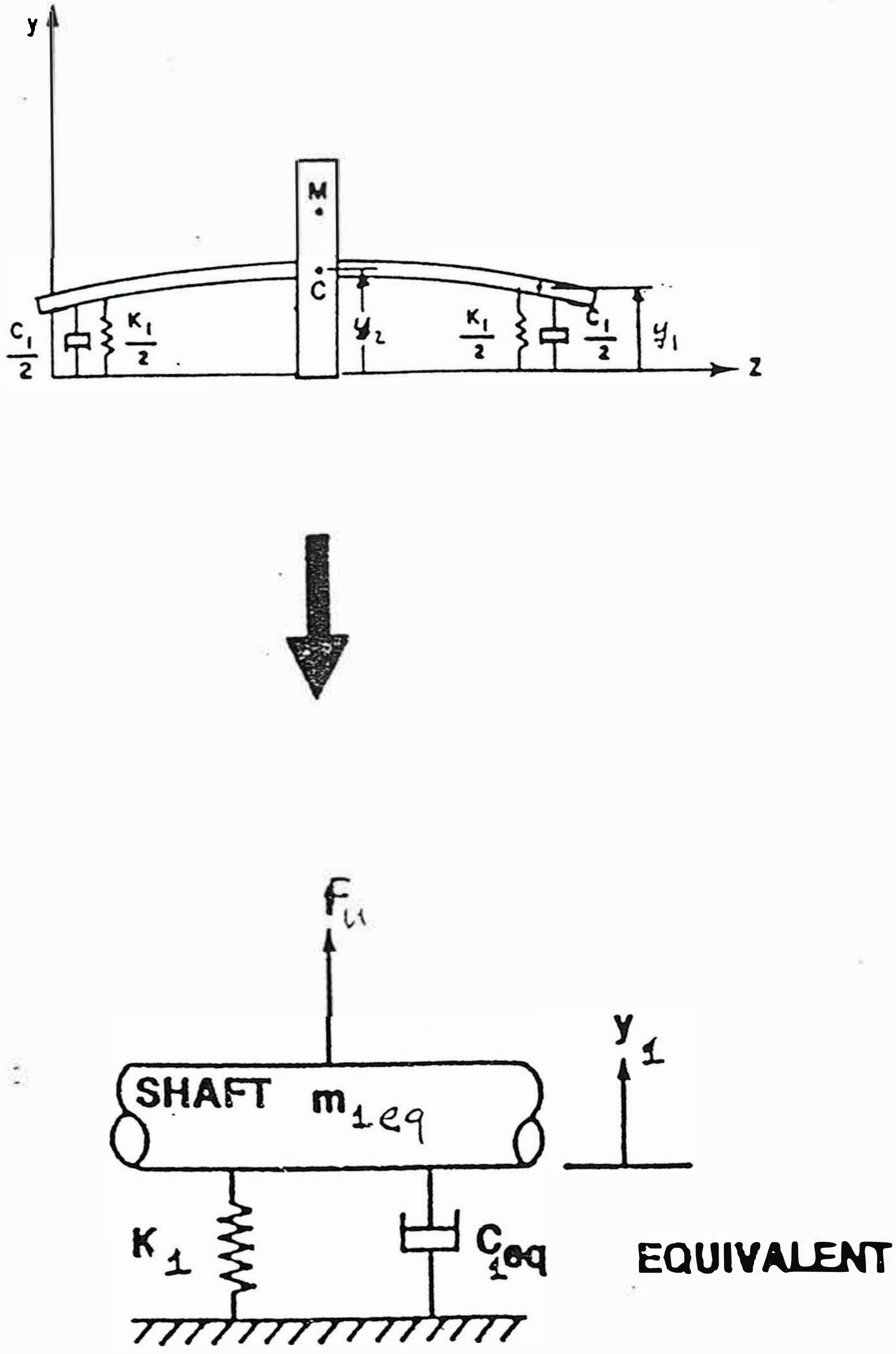
y
M
C
C1/2
K1/2
y2
K1/2
C1/2
y1
z
Fu1
SHAFT m1eq
y1
K1
C1eq
EQUIVALENT

Figure 3.3 Equivalent System Modeling Vibration at the Bearings

where

$m_{1eq} = (K_1 + K_2) / K_2 \, m$

$C_{1eq} = (1 - m/K_2 \, \omega^2) \, C_1$

These are the equivalent mass and damping terms acting at the bearings.

Solving for Z_1 gives

$$\frac{Z_1}{e_u} = \frac{m \, \omega^2}{(K_1 - m_{1eq} \, \omega^2) + i C_{1eq} \, \omega}$$

Define the terms

$f = \omega/\omega_{cr}$ = Frequency Ratio

$\xi_{1eq} = C_{1eq}/2m \, \omega_{cr}$ = Equivalent Damping Ratio At Bearings

Dividing the expression for Z_1/e_u by K_2 produces

$$\frac{Z_1}{e_u} = \frac{f^2}{K - (1+K) \, f^2 + 2 \, i \xi_{1eq} \, f}$$

This is the complex vibration amplitude at the bearings.

The absolute amplitude ratio at the bearings A_1/e_u is then

$$\frac{A_1}{e_u} = \frac{f^2}{\left\{ \left[K - (1+K) \, f^2\right]^2 + \left[2 \, \xi_{1eq} \, f\right]^2 \right\}^{1/2}} \qquad (3.15)$$

At the peak of vibration, Equation (3.10) gives the frequency ratio

$$f^2 = \left(\frac{\omega_c}{\omega_{cr}} \right)^2 = \frac{K}{1+K} \qquad (At\ Peak\ f \cong 1)$$

and the bearing amplitude ratio is

$$\frac{A_1}{e_u} = \frac{f}{2\xi_{1eq}} \qquad (At\ Peak\ f \cong 1)$$

$$\frac{A_1}{e_u} = \frac{1}{2\xi_{1eq}}\sqrt{\frac{K}{1+K}} \quad (At\ Peak\ f \cong 1) \tag{3.16}$$

Here, the terms on the right are

$$K = \frac{K_1}{K_2}\ , \quad \frac{C_{1eq}}{C_1} = \frac{1}{1+K}$$
$$\xi_{1eq} = \xi_1 \frac{1}{1+K} \tag{3.17}$$

The amplitude ratio is different from that for the single mass rotor on rigid bearings, Equation (2.38).

Generally, the bearing damping C_1 will be much higher than the rotor damping C_2 considered in the last section. Thus, the amplitude ratio on flexible bearings will usually be much lower than the previous case in Section 2. It should be noted that this is not the amplitude at the rotor center A_2/e_u which will be larger.

D. Bearing Amplification Factor

The bearing amplification factor is defined here as

AF_1 = Bearing Amplification Factor

It is taken as the peak value of A_1/e_u or

$$AF_1 = \frac{1}{2\xi_{1eq}}\sqrt{\frac{K}{1+K}} \tag{3.18}$$

from Equation (3.16).

Example 3.2 ***Equivalent Damping and Amplification Factor for Six-Stage Compressor***

Given: The tilting pad bearings in the six-stage compressor have the damping coefficients

C_{xx} = 170 N-sec/mm (980 lbf-sec/in)

C_{yy} = 190 N-sec/mm (1100 lbf-sec/in)

evaluated from a bearing analysis computer program.

Objective: Find the equivalent damping C_{1eq}, the equivalent damping ratio ξ_{1eq}, and the amplification factor for this compressor.

Solution: The average bearing damping coefficient is

$$C_b = (170 + 190)/2 = 180 \text{ N-sec/mm}$$

The total bearing damping is then

$$C_1 = 2C_b = 2(180) = 360 \text{ N-sec/mm}$$

Equation (3.17) gives the equivalent damping for the bearing vibration just derived as

$$C_{1eq} = C_1 \frac{1}{1+K} = (360)\frac{1}{1+5.25}$$

$$C_{1eq} = 58 \ N\text{-sec}/mm \ (330 \ lbf\text{-sec}/in)$$

Recall that the rotor damping C_2 from Example 2.6 was 4.0 N-sec/mm. The bearing damping here is about 15 times larger.

The bearing damping ratio ξ_1 is

$$\xi_1 = \frac{C_1}{2m\omega_{cr}} = 360\ \frac{N\text{-sec}}{mm} \times \frac{1}{2} \times \frac{1}{367kg}$$

$$\times \frac{1}{407}\ \frac{\sec}{rad} \times \frac{kg\text{-}m}{N\text{-sec}^2} \times \frac{1000\ mm}{m}$$

$$\xi_1 = 120$$

while the equivalent damping ratio ξ_{1eq} from Equation (3.17) is

$$\xi_{1eq} = \xi_1 \ (1/1+K) = 1.20 \ (1/1+5.25)$$

$$\xi_{1eq} = 0.193$$

Note that the equivalent damping ratio is significantly reduced but still much larger than the rotor damping $\xi_2 = 0.013$ from Example 6.2.

The amplification factor AF_1 is obtained from Equation (3.18) as

$$AF_1 = \frac{1}{2\xi_{1eq}}\sqrt{\frac{K}{1+K}}$$

$$= \frac{1}{2(0.193)}\sqrt{\frac{5.25}{1+5.25}}$$

The result is

$$AF_1 = 2.37 \text{ (Calculated)}$$

This value may be compared with the observed vibration plot shown in Fig. 2.6 with an amplification factor measured at the bearings of

$$AF_1 = 2.56$$

3.4 Amplification Factor By Half Power Method

The amplification factor is usually obtained from measured data by employing two points known as the half power points. These two points are located on each side of the vibration peak. Both are located at 0.707 of the peak amplitude - one on each side labeled ω_1 and ω_2 (or f_1 and f_2 for frequency ratios).

$\omega_1 = f_1 =$ First Half Power Point

$\omega_2 = f_2 =$ Second Half Power Point

It can be shown that these two points correspond to one-half of the peak power in the rotor. Also, let the peak response speed be denoted as

$\omega_u = f_u =$ Peak Response Speed

These are all obtained from the vibration plot.

Then the amplification factor can be found from the formula

$$AF = \frac{\omega_u}{\omega_2 - \omega_1} = \frac{f_u}{f_2 - f_1} \tag{3.19}$$

The derivation for this formula is given in standard vibration textbooks and is not repeated here. Figure 3.5 illustrates the use of the half power points on the vibration plot for the case of $\zeta_2 = 0.1$. The peak amplitude is $A_2/e_u = 0.5$ and the half power points are located at $A_2/e_u = 3.5$. This yields frequencies of

$$f_1 = 0.9 \quad , f_u = 1.0 \quad , f_2 = 1.1$$

and the amplification factor from

$$AF = Q = 1.0/1.1\text{-}0.9 = 1.0/0.2 = 5.0$$

These frequencies are also shown in Fig. 3.4.

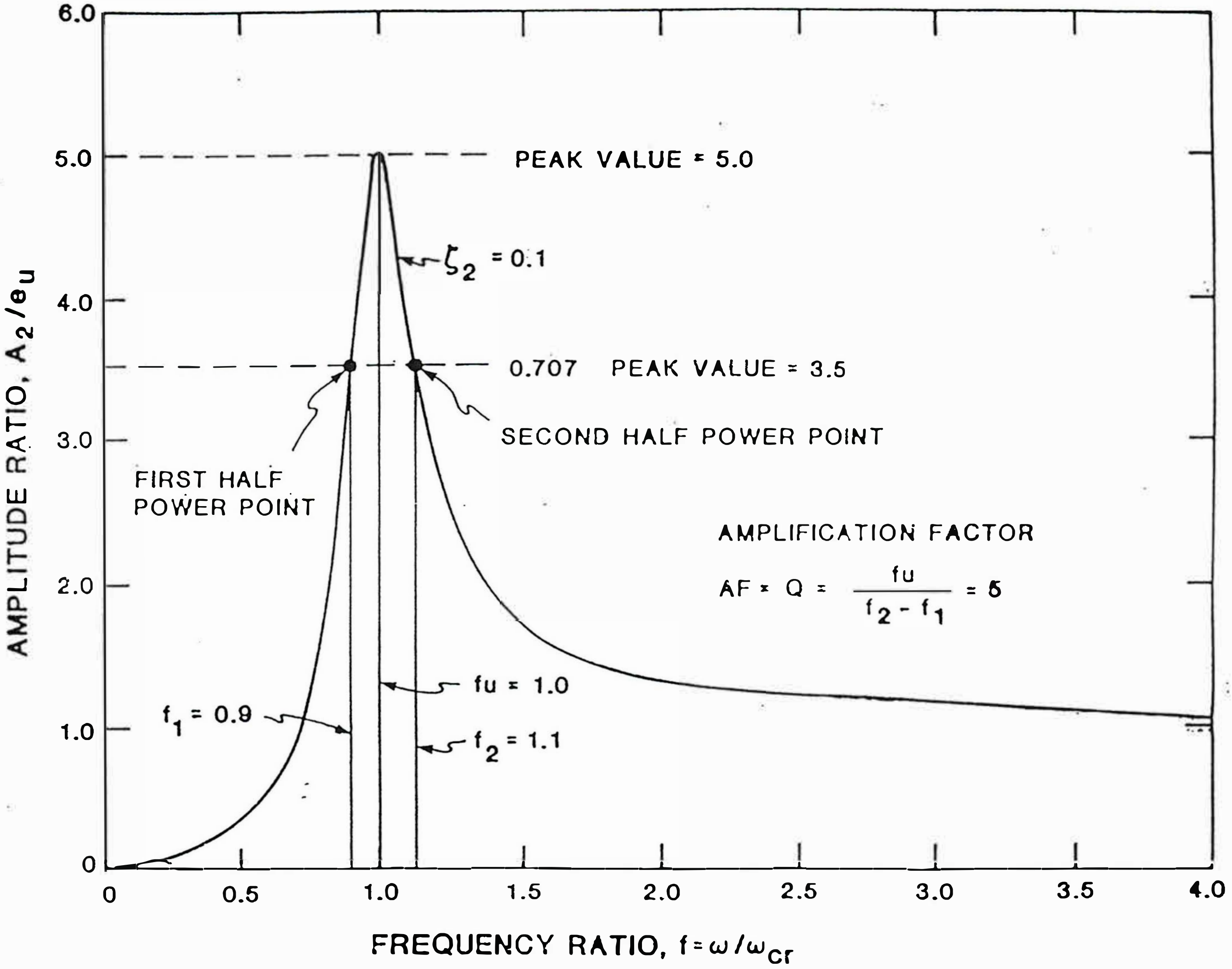

Figure 3.4 Amplification Factor Using Half Power Method

3.5 Rotor Center Span Amplitude and Optimum Bearing Damping

For a flexible rotor, this is an optimum value of bearing damping that one should design for. The optimum bearing damping results in the lowest rotor amplification factor, as measured at the rotor center. The optimum damping that should be selected is a function of the bearing to shaft stiffness ratio, K. For minimum rotor response, the dimensionless K value should be near unity. Rotors with K exceeding unity represent a condition in which the bearings are too stiff in relationship to the shaft. This requires more damping at the bearings to achieve the optimum damping and higher rotor amplification factors result.

From Equations (3.1) and (3.2), the complex synchronous motion at Z_1 at the bearings may be expressed in terms of Z_2 as follows

$$\begin{aligned} Z_1 &= \left(\frac{K_2}{K_1 + K_2 + i\omega C_1} \right) Z_2 \\ &= K_2 R_b Z_2 \end{aligned} \tag{3.20}$$

The bearing amplitude Z_2 may be eliminated from Equation (3.8) to form

$$m\ddot{Z}_2 + K_2 (1 - R_b) Z_2 = m e_u \omega^2 e^{i\omega t} \tag{3.21}$$

Where R_b is a complex function of bearing damping, as well as stiffness.

A single equation to represent the rotor center motion may be written in terms of effective center plane stiffness K_{2e} as follows

$$m\ddot{Z}_2 + C_{2e}\dot{Z}_2 + K_{2e} Z_2 = m e_u \omega^2 e^{i\omega t} \tag{3.22}$$

Where

$$K_{2e} = K_2 \left[\frac{K_1 (K_1 + K_2) + (\omega C_1)^2}{(K_1 + K_2)^2 + (\omega C_1)^2} \right]$$

$$C_{2e} = \frac{K_2^2 C_1}{(K_1 + K_2)^2 + (\omega C_1)^2}$$

In dimensionless form, Equation (3.21) becomes

$$\ddot{Z}_2 + 2\,\omega_{cr}\,\xi_{2e}\,\dot{Z}_2 + \omega_c^2\,Z_2 = e_u\,\omega^2\,e^{i\omega t} \tag{3.23}$$

Where

$$\xi_{2e} = \frac{\xi_1}{(1 + K)^2 + (2f\xi_1)^2}$$

$$\omega_c^2 = \omega_{cr}^2 \left[\frac{K(1 + K) + (2\,f\xi_1)^2}{(1 + K)^2 + (2f\xi_1)^2} \right]$$

$$\xi_1 = \frac{C_{b1} + C_{b2}}{2M\,\omega_{cr}} = \frac{C_1}{M\,\omega_{cr}}$$

$M = \Sigma M_i\,\phi^2$ = modal mass for 1st critical speed

ϕ = normalized mode shape at ith station

Let R be defined as

$$R = \frac{2\,\xi_1}{1 + K}$$

Then the effective center plane damping ratio ξ_2 is given by

$$\xi_{2e} = \frac{R}{2\,(1 + K)\,(1 + (Rf)^2)} \tag{3.24}$$

The rotor amplification factor at the critical speed is given by

$$AF_2 = A_c = \frac{1}{2\,\xi_2} \tag{3.25}$$

Black has shown that for optimum damping with f $\approx$1 then

$$R = 1$$

The effective center plane damping ratio is

$$\xi_{2e} = \frac{1}{4\,(1 + K)}$$

The rotor amplification factor with optimum bearing damping is from

$$A_{c_{opt}} = 2\,(1 + K) \tag{3.26}$$

The above equation illustrates the important conclusion that the K ratio should be kept as low as possible in order to achieve an optimum rotor with a low amplification factor. This equation implies that the bearing stiffness ($K_1 = K_{b1} + K_{b2}$) should not be of greater value than the shaft stiffness K_2. If the sum of the bearing stiffnesses greatly exceeds the shaft stiffness, then it will be impossible to achieve a rotor with a low amplification factor regardless of the bearing damping.

Example 3.3 Rotor Center Plane Amplification Factor for Six-Stage Compressor

From Example 3.2

$$C_1 = 1{,}040 \text{ lbf-sec/in } (364 \text{ N-sec/mm})$$

$$= 2{,}080 \text{ lb-sec/in}$$

$$C_c = 2\,M\omega_{cr} = \frac{2 \times 809 \text{ lb}}{386} \times 407.3\ rad/\text{sec}$$

$$= 1{,}707 \text{ lbf-sec/in } (299 \text{ N-sec/mm})$$

$$\xi_1 = \frac{C_1}{C_c} = 1.22$$

$$R = \frac{2 \times 1.22}{1 + 5.25} = 0.39$$

$$\xi_{2e} = \frac{R}{2\,(1 + K)\,(1 + (Rf)^2)} = \frac{0.39}{2 \times 6.25 \times 1.151}$$

$$AF_2 = Q = \frac{1}{2\,\xi_2} = \frac{1}{2 \times .0271} = 18.5$$

The rotor amplification factor at the critical speed is over 18. The optimum bearing damping for this high stiffness ratio of $K = 5.25$ is given by

$$C_b = \frac{M\,\omega_{cr}}{2}(1 + K) = \frac{C_c}{4}(1 + K)$$

$$= \frac{1{,}707}{4}(6.25) = 2{,}667\ lb\text{-sec}/in\ \ (467\ N\text{-sec}/mm)$$

The minimum center span amplification factor that is achievable is

$$A_{c_{opt}} = 2\,(1 + K) = 2 \times 6.25 = 12.50$$

It is apparent from this calculation that in order to achieve a lower amplification factor for the six-stage compressor, the K ratio must be reduced. This is achieved by using either softer bearings or by increasing the shaft stiffness.

SECTION 4

COMPUTER SIMULATIONS OF FLEXIBLE ROTOR ON FLEXIBLE SUPPORTS

4.1 Single-Mass Rotor on Rigid Supports

A 5-station model using the ***DyRoBeS*** computer program was used to simulate the single-mass rotor, as given in Table 2.5. Table 4.1 represents a rotor 72 inches long with a shaft diameter of 6.5 inches. A concentrated weight of 473 lb was placed at the center span of the rotor. In this model, the shaft weight is 676 lb and the total rotor weight is 1,149 lb. Although the weight of this rotor model is lower than the total rotor weight as given in Table 2.5, the model properties for the first mode are equivalent to the 6-stage compressor.

Figure 4.1 represents the rotor 1st mode shape at 3,782 RPM. This is very close to the hand calculation of 3,787 RPM, as shown in Table 2.6. The shape of the rotor first mode on rigid bearings is approximately a sine curve with zero amplitude at the bearings and maximum amplitude at the rotor center.

Table 4.2 represents the 1st critical speed mode shape and distribution of strain and kinetic energy for the rotor system. In this model, a bearing stiffness of 1.0E7 lb/in was assumed. This high value of stiffness is not exactly a rigid support, as there is 1% strain energy in each bearing. It is of interest to note that 79% of the kinetic energy is associated with the center plane of the rotor. If the shaft were treated as a massless shaft, then the center section kinetic energy would be 100%. This would represent the case of the Jeffcott rotor.

In Table 4.2, the maximum amplitude is equal to unity. This is because in a critical speed calculation, the amplitude is relative. The actual shaft amplitude is a function of the rotor unbalance and the amount of bearing damping. The condition of only 1% bearing strain energy is very similar to the situation of utility fan rotors mounted on rolling element bearings. The bearing stiffness is of the order of 1E6 to 2E6 lb/in and essentially no bearing damping. In this case, it would be dangerous to traverse the critical speed region because of the lack of system damping. In Table 4.2 is a summary of the bearing data and rotor modal properties. In this example, it is seen that the rotor modal weight Wm mode is listed as 807.4 lb. An increase of bearing stiffness from 1E7 to 1E8 lb/in will cause the critical speed to increase to 3,818 RPM and the bearing strain energy will approach zero.

The ratio of the bearing strain energy to the total strain energy for the 1st mode should be carefully checked. The bearing total strain energy should be above 30% if one is to avoid high amplification factors at the 1st critical speed. If the bearing strain energy drops below this ratio, then this is an indication that the bearing stiffness is excessive to the shaft stiffness.

```
   FileName: C:\DYROBES_Ver6\Example\SMASS_6ST_COMP_Sect4.rot

                          ***** Unit System = 2 *****
                   Engineering English Units (s, in, Lbf, Lbm)

                                MODEL SUMMARY


*************************System Parameters****************************

                               1  Shafts
                               4  Elements
                               8  SubElements
                               1  Materials
                               1  Rigid Disks
                               0  Unbalances
                                  2  Linear Bearings
                               5  Stations
                              20  Degrees of Freedom

*********************** Description Headers************************************

 CRITICAL SPEED ANALYSIS OF 6 STAGE COMPRESSOR SIMULATED AS
                       A SINGLE MASS ROTOR

  Wtotal = 1618 Lb, Wmodal = 809 Lb, L = 72 In, D =6.6 In ,
  Kbrg =1.0E7 (Rigid Bearings)

*************************Material Properties*********************************
           Property        Mass          Elastic         Shear
              no          Density        Modulus         Modulus
                        (Lbm/in^3)     (Lbf/in^2)      (Lbf/in^2)

              1         .28300         .30000E+08     .12000E+08


************************* Shaft Elements*************************************
       Sub   Left              ------ Mass ------    --- Stiffness ----
 Ele   Ele   End               Inner     Outer       Inner     Outer   Material
 no     no   Loc     Length   Diameter  Diameter    Diameter  Diameter    no
             (in)     (in)      (in)      (in)        (in)

  1
       1      .000   9.0000     .0000    6.5000       .0000    6.5000      1
       2     9.000   9.0000     .0000    6.5000       .0000    6.5000      1
  2
       1    18.000   9.0000     .0000    6.5000       .0000    6.5000      1
       2    27.000   9.0000     .0000    6.5000       .0000    6.5000      1
  3
       1    36.000   9.0000     .0000    6.5000       .0000    6.5000      1
       2    45.000   9.0000     .0000    6.5000       .0000    6.5000      1
  4
       1    54.000   9.0000     .0000    6.5000       .0000    6.5000      1
       2    63.000   9.0000     .0000    6.5000       .0000    6.5000      1

*****************************************************************************
```

Table 4.1 5- Station Jeffcott Rotor Model On Rigid Supports With 808 LB Modal Weight

```
******************************** Rigid Disks ********************************
    Station                      Diametral           Polar        Skew     Skew
      Number          Mass        Inertia             Inertia        X        Y
                      (Lb)      (Lb-in^2)          (Lb-in^2)    (degree) (degree)

       3            474.00        .00000             .00000        .0000    .0000

*****************************************************************************


****************** Rotor Equivalent Rigid Body Properties ******************
  Rotor  Left End              C.M.                Diametral     Polar     Speed
   no    Location  Length  Location      Mass       Inertia     Inertia    Ratio
              (in)      (in)      (in)      (Lb)      (Lb-in^2)    (Lb-in^2)

   1      .000    72.000   36.000   1150.1      .29388E+06  3571.      1.0000

*****************************************************************************


*************************** Bearing Coefficients ***************************
 StnI,  J   Angle   rpm     ---------------- Coefficients -----------------
                                 Bearing No. 1
              St 1    0     .00                      (Linear Bearing)
                           Kt: Lbf/in, Ct: Lbf-s/in;  Kr: Lbf-in, Cr: Lbf-in-s
                         Direct Stiffness And Damping Coefficients:
  Kxx   Kxy   Kyx   Kyy    .100000E+08  .000000       .000000       .100000E+08
  Cxx   Cxy   Cyx   Cyy    1.00000      .000000       .000000       1.00000

                         Moment Stiffness And Damping Coefficients:
  Krr   Krs   Ksr   Krr    .000000      .000000       .000000       .000000
  Crr   Crs   Csr   Crr    .000000      .000000       .000000       .000000

                                 Bearing No. 2
                5     0     .00                      (Linear Bearing)
                           Kt: Lbf/in, Ct: Lbf-s/in;  Kr: Lbf-in, Cr: Lbf-in-s
                         Direct Stiffness And Damping Coefficients:
  Kxx   Kxy   Kyx   Kyy    .100000E+08  .000000       .000000       .100000E+08
  Cxx   Cxy   Cyx   Cyy    1.00000      .000000       .000000       1.00000

                         Moment Stiffness And Damping Coefficients:
  Krr   Krs   Ksr   Krr    .000000      .000000       .000000       .000000
  Crr   Crs   Csr   Crr    .000000      .000000       .000000       .000000

*****************************************************************************

********************** Gravity Constant (g)  (in/s^2) **********************

                X direction =   .000000        Y direction = -386.088

*****************************************************************************
```

Table 4.1 5- Station Jeffcott Rotor Model On Rigid Supports With 808 LB Modal Weight
(Continued)

```
********************** Critical Speed Analysis *****************************
            No     RPM         Rad/Sec         Hz

             1    3782.42      396.094      63.0404
             2    22396.0      2345.31      373.267
             3    37276.3      3903.56      621.272

**************** Mode Shapes for Critical Speed Analysis *******************

****************************  Mode No.  1  *********************************

   Whirl Speed =   3,782.4 RPM  =  396.09 Rad /Sec = 63.04 Hz

  ************** (Normalized) Displacements (Eigenvector) **************

       **************** Shaft Element Displacements *****************
                             Left End                 Right End
       stn  subele   Translation Rotation     Translation Rotation

        1     1          .0184     .0410         .3836     .0382
              2          .3836     .0382         .6993     .0300
        2     1          .6993     .0300         .9172     .0170
              2          .9172     .0170        1.0000     .0000
        3     1         1.0000     .0000         .9172    -.0170
              2          .9172    -.0170         .6993    -.0300
        4     1          .6993    -.0300         .3836    -.0382
              2          .3836    -.0382         .0184    -.0410
        5     1          .0184    -.0410

     ******************************************************************

          Modal Mass =   2.0896          Modal Stiffness = 327,840 lb/in
                        (807.4 lb)
   ****************** Energy Distribution (Percentage) ******************

                              Kinetic Energy         Potential Energy
                           Translation  Rotation         (Strain)
     Rigid Disks
         Stn
          3                  58.753        .000             .000
     Shaft Elements
       Element
          1                   3.777       -.078            7.595
          2                  16.943       -.019           41.377
          3                  16.943       -.019           41.377
          4                   3.777       -.078            7.595
     Bearings
       Stn I   Stn J
          1       0            .000        .000            1.028
          5       0            .000        .000            1.028

   **********************************************************************
```

Table 4.2 1ST Critical Speed Mode And Energy Distribution

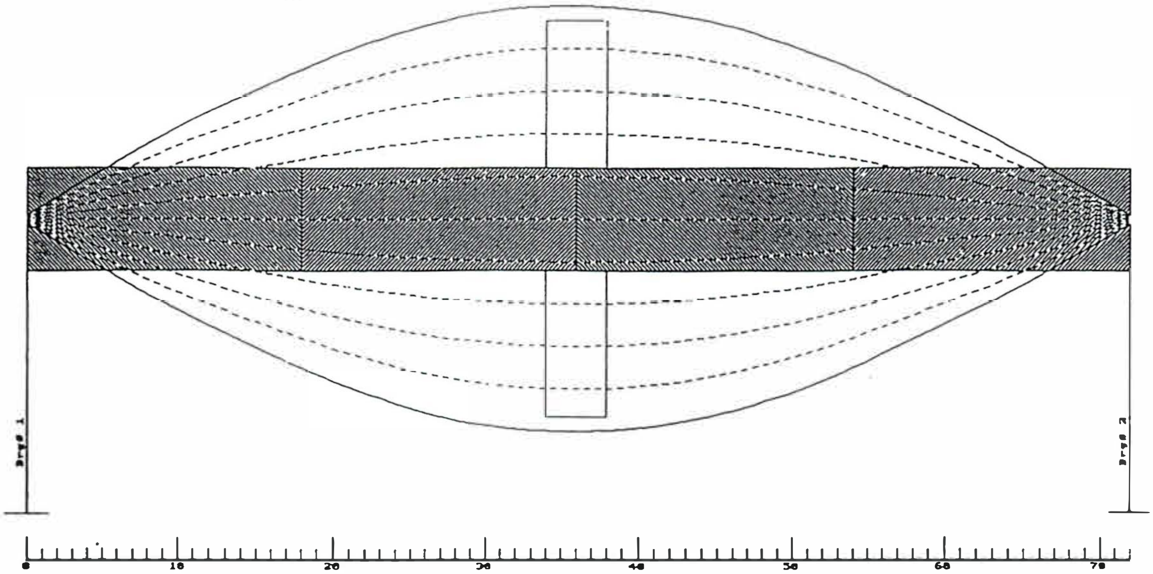

```
UNDAMPED CRITICAL SPEED ANALYSIS OF 6 STAGE COMPRESSOR SIMULATED AS A
SINGLE MASS ROTOR , Wtotal = 1618 Lb, Wmodal =  809 Lb, L=72 IN, D=6.5 IN
CRITICAL SPEED CALCULATION ON STIFF SUPPORTS TO SIMULATE RIGID BRG CASE
MODE #1 : Frequency = 63.49 HZ (3810 RPM)
Mode is SYNCHRONOUS
```

Figure 4.1 Compressor Rotor 1st Critical Speed
on Rigid Supports Using *CRITSPD-PC*
K_b = 10E6 Lb/in; N_{cr} = 3,810 RPM

```
Critical Speed Mode Shape
ANALYSIS OF A 6 STAGE COMPRESSOR (SINGLE MASS ROTOR MODEL)
ROTOR, Wtotal= 1618 Lb, Wmodal= 809 Lb, L= 72 In, D= 6.5 In
STIFF BEARINGS= 100E6 Lb/In

ANALYSIS OF 6 STAGE COMPRESSOR SIMULATED AS A SINGLE MASS
Spin/Whirl Ratio = 1.0000  -- Kxx used
Mode No = 1, Critical Speed = 3849 rpm
```

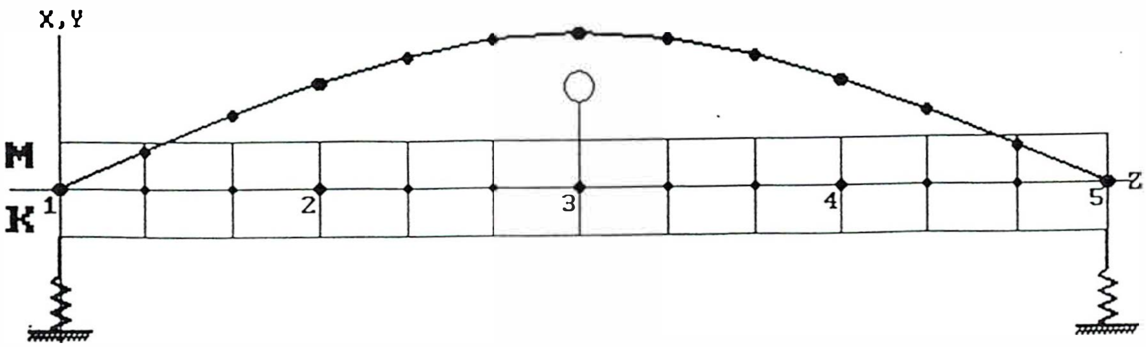

Figure 4.2 Compressor Rotor 1st Critical Speed
Using *DYROBES* - K_b = 10E7 Lb/in; N_{cr} = 3,849 RPM

For the value of $K = 2K_b/K_s = 5.25$, as given in Section 3.2, the amplification factor with optimum damping will be

$$A_c = 2\,(1 + K) = 12.5$$

Figure 4.2 represents the same rotor model as shown in Figure 4.1. Figure 4.2 was generated by the ***DyRoBeS*** finite element program, whereas Figure 4.1 was generated by a transfer matrix method. The critical speed on rigid supports for Figure 4.2, computed by the finite element method, is 3,849 RPM, which is identical to the results computed by the transfer matrix method. A 5-station model was used in this case with 3 subelements in each shaft element.

4.2 Single-Mass Rotor on Flexible Supports

Figure 4.3 represents the critical speed of the rotor assuming a bearing stiffness of 910,000 lb/in. In this case, the critical speed has been reduced from 3,848 RPM to 3,471 RPM. Figure 4.3 represents the compressor rotor 1st critical speed with a finite bearing stiffness of K_b = 910,000 lb/in. In this case, the critical speed has been reduced to 3,471 RPM. A similar calculation by the ***DyRoBeS*** program shows a critical speed of 3,461 RPM.

One useful technique is to plot the rotor critical speed or speeds as a function of bearing stiffness. Figure 4.4 represents the rotor 1st critical speed for various values of bearing stiffness. Figure 4.4 is plotted in log scale of critical speed versus bearing stiffness from 100,000 lb/in to 10E6 lb/in. At low values of bearing stiffness around 100,000 lb/in, the rotor acts more as a rigid body in cylindrical whirl. For stiffness values exceeding 1 million lb/in, the critical speed begins to asymptotically approach 3,849 RPM. As the critical speed plot begins to flatten, this is an indication that an increase of bearing stiffness has a disproportionately small effect on increasing the critical speed. The implication of this is that there is no strain energy in the bearings and that the bearing motion is approaching a nodal point.

From Table 4.2, the modal rotor stiffness is K_s = 333,259. The dimensionless K ratio is given by:

$$K = \frac{2\,K_b}{K_s} = \frac{2\ x\ 910{,}000}{333{,}259} = 5.46$$

The approximate reduced critical speed is given by:

$$N_c = N_{cr}\sqrt{\frac{K}{K+1}} = 3{,}809\sqrt{\frac{5.46}{6.46}} = 3{,}501\ \ \mathrm{RPM}$$

This compares closely to the value of 3,471 RPM shown in Figure 4.3.

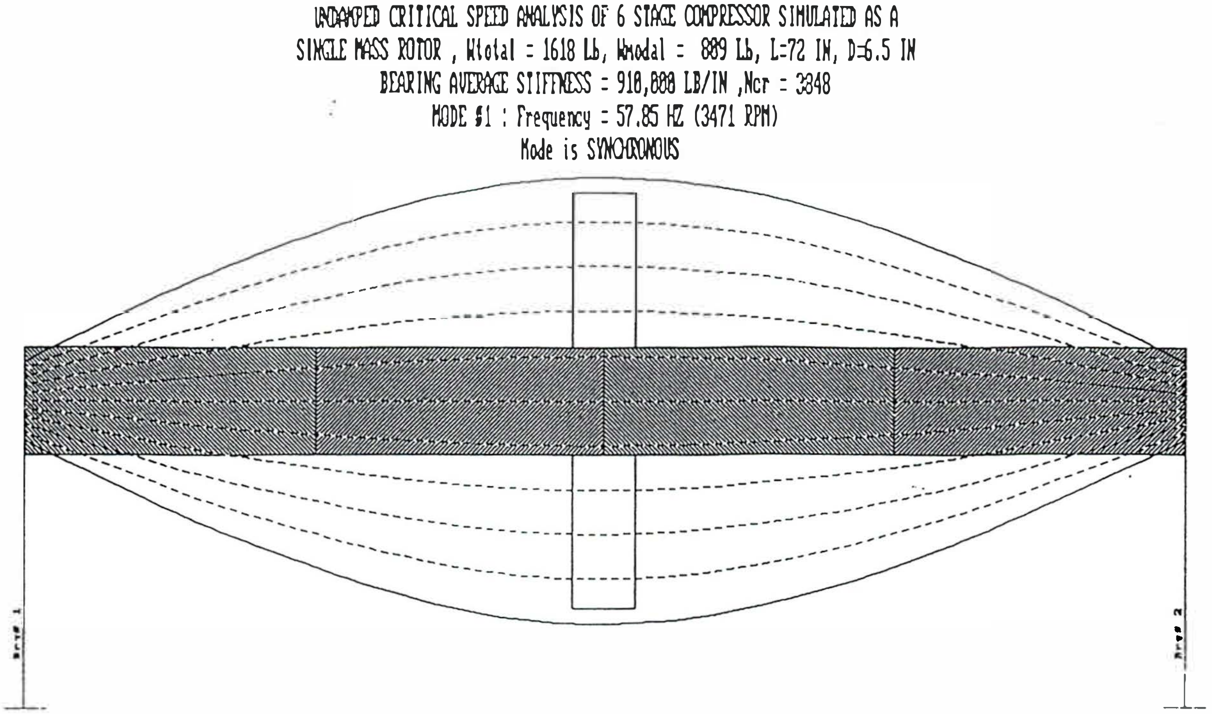
UNDAMPED CRITICAL SPEED ANALYSIS OF 6 STAGE COMPRESSOR SIMULATED AS A
SINGLE MASS ROTOR , Wtotal = 1618 Lb, Wmodal = 889 Lb, L=72 IN, D=6.5 IN
BEARING AVERAGE STIFFNESS = 910,000 LB/IN ,Ncr = 3348
MODE #1 : Frequency = 57.85 HZ (3471 RPM)
Mode is SYNCHRONOUS
Brg# 1
Brg# 2

Figure 4.3 Compressor Rotor 1st Critical Speed
With K_b = 910,000 Lb/in; N_c = 3,471 RPM

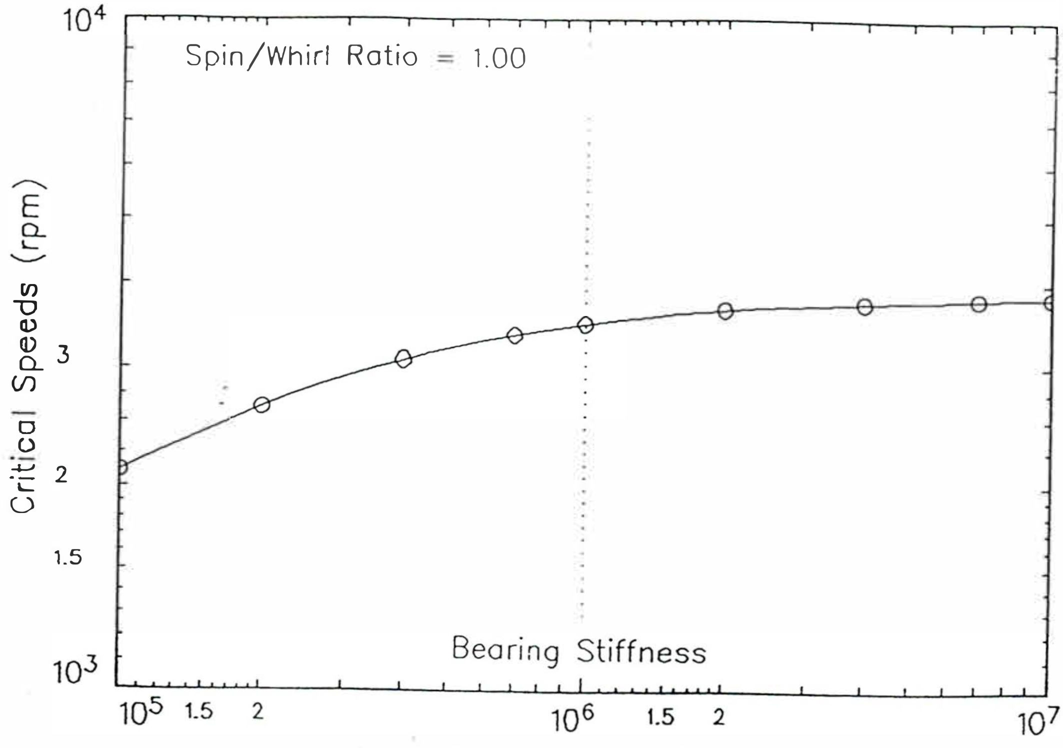

Figure 4.4 Compressor 1st Critical Speed
With Various Values of Bearing Stiffness

4.3 Undamped and Damped Critical Speed of 6-Stage Compressor on Flexible Bearings

Figure 4.5 represents the finite element analysis of the compressor undamped 1st critical speed with K_b = 910,000 lb/in nominal bearing stiffness. The effect of bearing flexibility reduces the rotor 1st critical speed from 3,847 RPM to 3,461 RPM, as shown in Figure 4.5. The finite element calculation of 3,461 RPM is very close to the value of 3,471 RPM, as calculated by the transfer matrix method.

In Figure 4.6, the compressor first forward whirl mode was computed with a horizontal bearing stiffness of K_{xx} = 800,000 lb/in and a vertical bearing stiffness of K_{yy} = 1.04E6 lb/in. In addition to the bearing stiffness, bearing damping of C_{xx} = 980 lb-sec/in and C_{yy} = 1,100 lb-sec/in was included. Figure 4.6 represents the 1st critical speed forward whirl mode. Since the bearing stiffness in the horizontal and vertical directions are dissimilar, the orbit is not circular. Note the considerable difference of the amplitude as observed at the bearings and at the center of the rotor. The log decrement δ for this forward mode is .191. This corresponds to a rotor center plane amplification factor of 16.4. The amplification factor as observed at the bearings will be considerably smaller. An improvement in the overall log decrement for the compressor first critical speed may be achieved by reducing both the bearing stiffness and damping for the system.

The modal damping ξ is related to the log decrement δ as follows:

$$\xi = \frac{\delta}{\sqrt{4\pi^2 + \delta^2}}$$

The rotor amplification factor is given by:

$$A_c = \frac{1}{2\xi} = \frac{\pi}{\delta} \quad \text{for small values of } \delta.$$

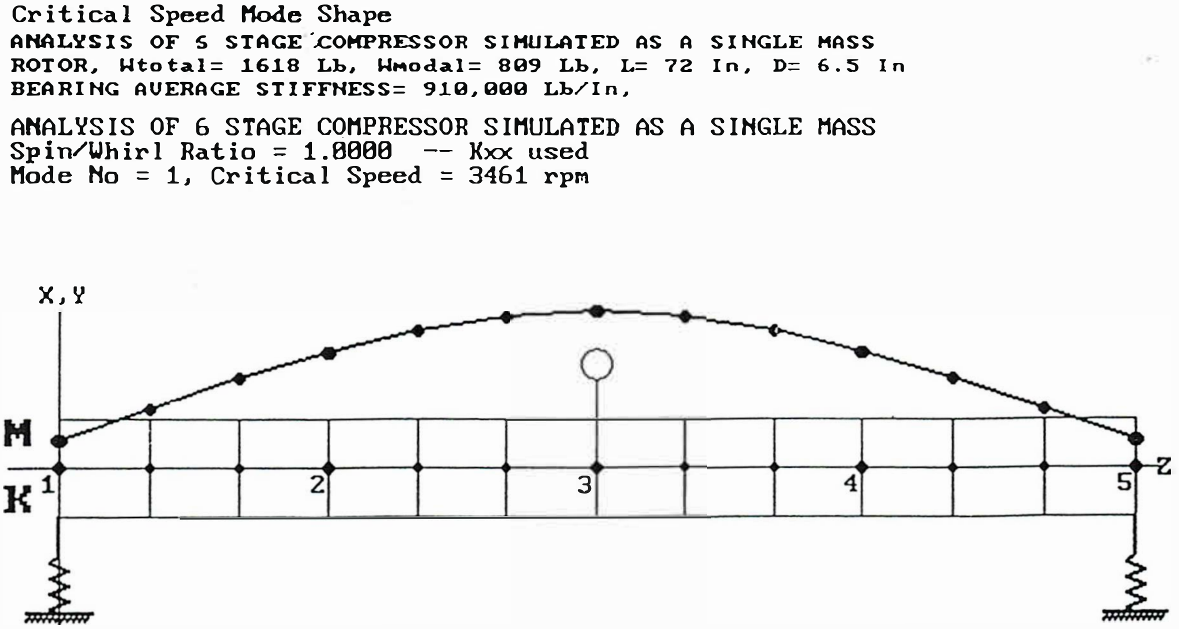

```
Critical Speed Mode Shape
ANALYSIS OF 5 STAGE COMPRESSOR SIMULATED AS A SINGLE MASS
ROTOR, Wtotal= 1618 Lb, Wmodal= 809 Lb, L= 72 In, D= 6.5 In
BEARING AVERAGE STIFFNESS= 910,000 Lb/In,

ANALYSIS OF 6 STAGE COMPRESSOR SIMULATED AS A SINGLE MASS
Spin/Whirl Ratio = 1.0000  -- Kxx used
Mode No = 1, Critical Speed = 3461 rpm
```

Figure 4.5 Compressor Undamped Critical Speed Mode With K_b = 910,000 Lb/in

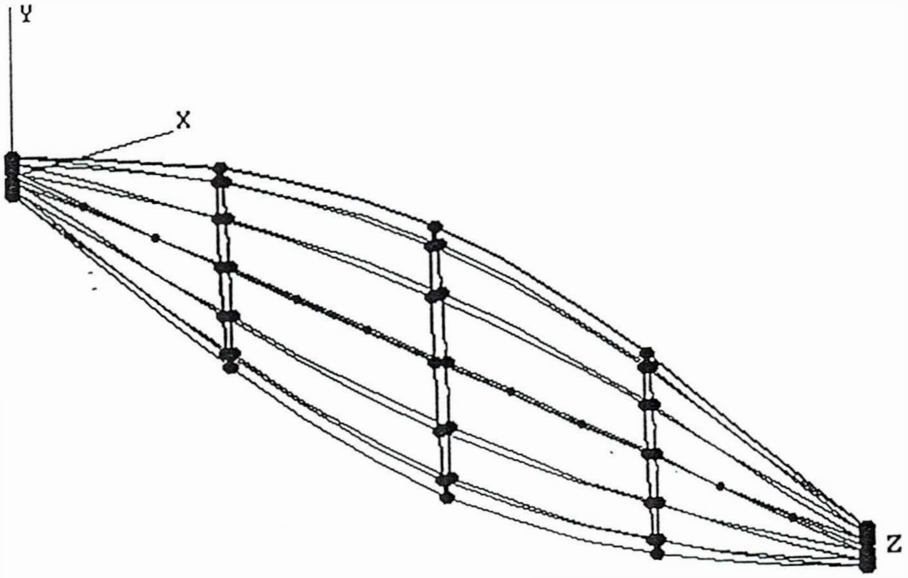

Figure 4.6 Compressor 1st Forward Whirl Mode
With K_{xx} = 800,000 Lb/in, K_{yy} = 1.04E6 Lb/in
C_{xx} = 980 Lb-sec/in, C_{yy} = 1,100 Lb-sec/in
δ = 0.191, A_c = 16.4

4.4 Unbalance Response of a 6-Stage Compressor with Centered Plane Unbalance

Figure 4.7 represents the bearing amplitude in the horizontal and vertical directions with center span unbalance. Note that the amplitudes in the X and Y directions are slightly different, due to the bearing asymmetry. Maximum bearing amplitude occurs at the vertical direction, even though the bearing damping is higher. The maximum amplitude in the vertical direction is .53 mils p-p at 3,525 RPM and the maximum amplitude in the horizontal direction is .46 mils at 3,450 RPM.

Figure 4.8 represents the center span motion. The maximum center span amplitude occurs at the vertical direction and is 3.6 mils at 3,525 RPM. The difference between the center span vertical amplitude and the bearing amplitude is a factor of 6.8. Note that as the rotor speed exceeds 5,000 RPM, the amplitudes in the horizontal and vertical directions are identical. This represents circular motion. At a higher speed of around 7,000 RPM, the amplitude at the center becomes constant. This represents the unbalance eccentricity vector. The rotor amplification factor may also be determined by dividing the peak rotor amplitude in either the horizontal or vertical directions by the unbalance eccentricity vector measured at the higher speed.

Figure 4.9 represents the polar plot of the horizontal motion from 2,000 to 5,000 RPM. The phase angle at the critical speed occurs at approximately a phase lag of 120°. Figure 4.10 represents the polar plot of the horizontal motion at the shaft center. At the critical speed of 3,450 RPM, the phase lag is 90° from the unbalance eccentricity vector. Note, however, that there is a 30° phase angle lag of the bearing vibration from the rotor center motion. This phase angle difference between the bearing and the shaft center motion should be taken into consideration when attempting center plane balancing based on the bearing amplitude and phase readings. The balance trial weight should be placed at a 60° lag from the maximum journal amplitude vector. This would place it at approximately 180°, which would be the correct location.

Figure 4.11 represents the compressor center and journal orbits at 3,525 RPM. This represents the speed at which the peak rotor amplitudes at both the journal and center are observed. Note that due to the asymmetry of the tilting-pad bearings, the orbit at the critical speed is elliptical, rather than circular. The phase angle at the speed of maximum amplitude is not 90°, as would be the case for a slightly damped rotor, but is closer to 120°. Figure 4.12 represents the compressor and journal orbits at 5,000 RPM. This speed is well above the rotor first critical speed and the phase angle of both the compressor center and journal have gone through approximately a 180° shift. The timing mark on the orbit indicates the location where the first balance trial weight should be placed.

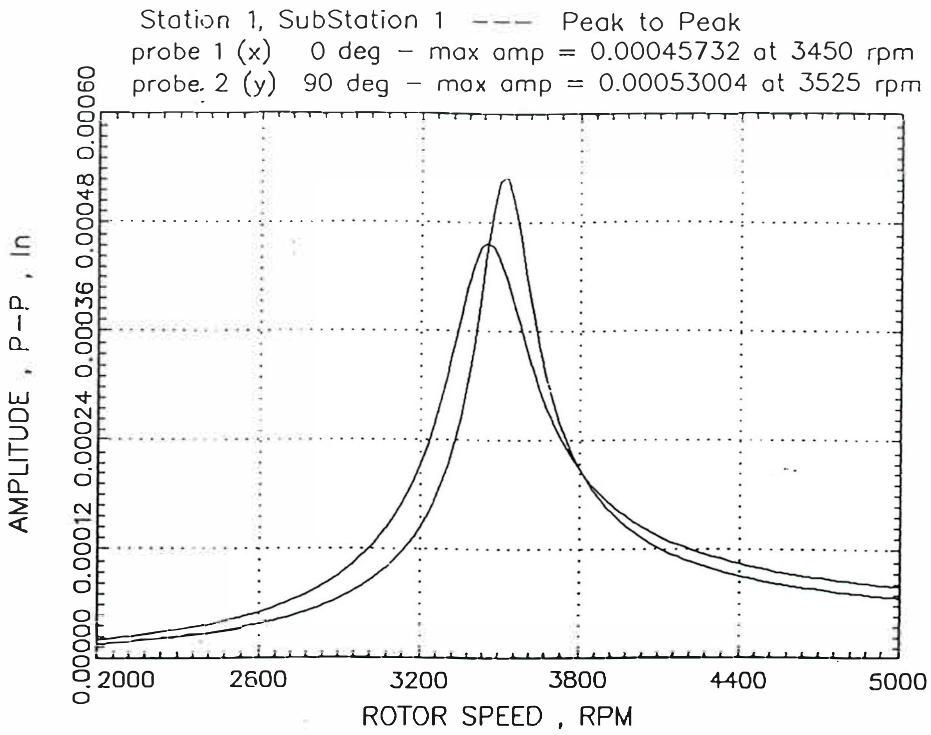

Figure 4.7 Bearing Amplitude With Center Span Unbalance

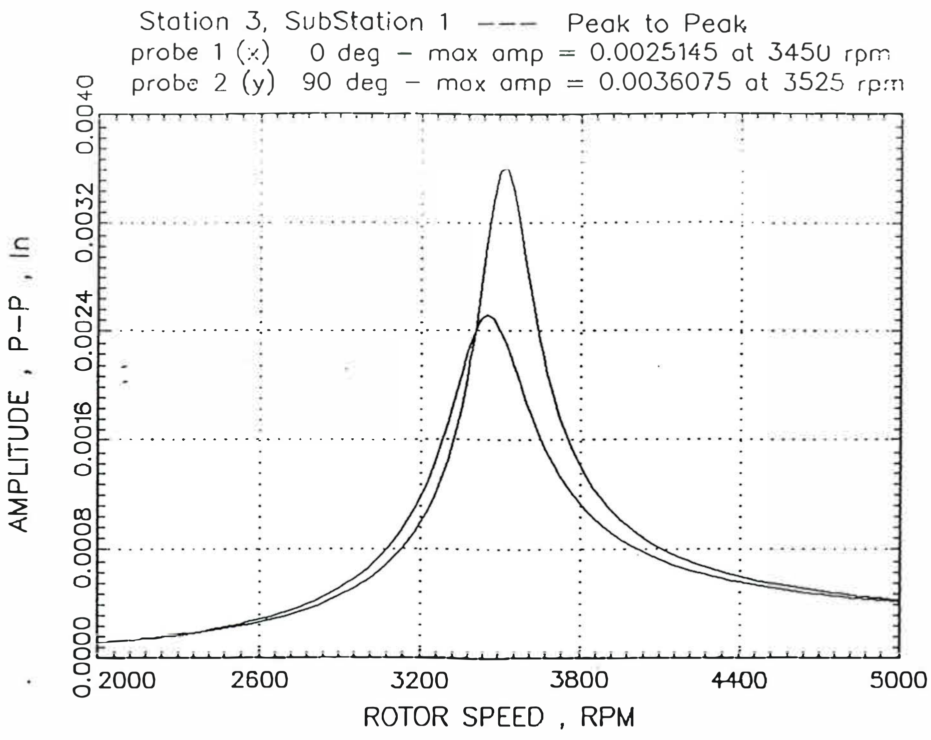

Figure 4.8 Compressor Center Span Motion vs. Speed

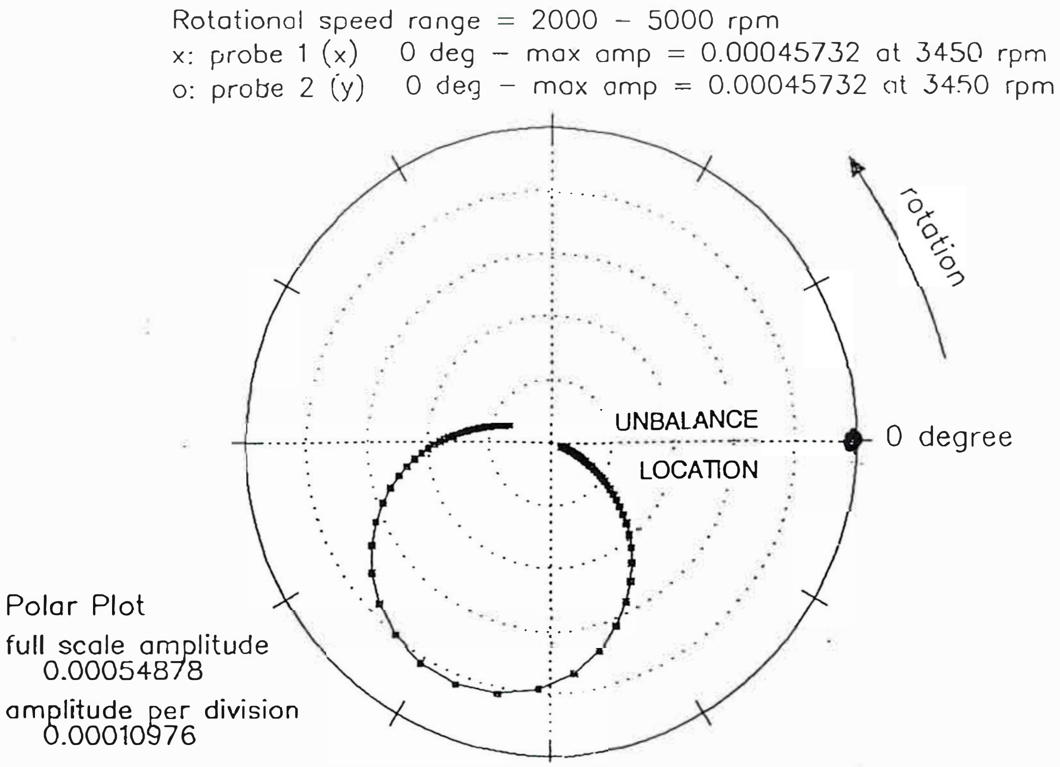

Figure 4.9 Polar Plot of Horizontal Motion at Bearing

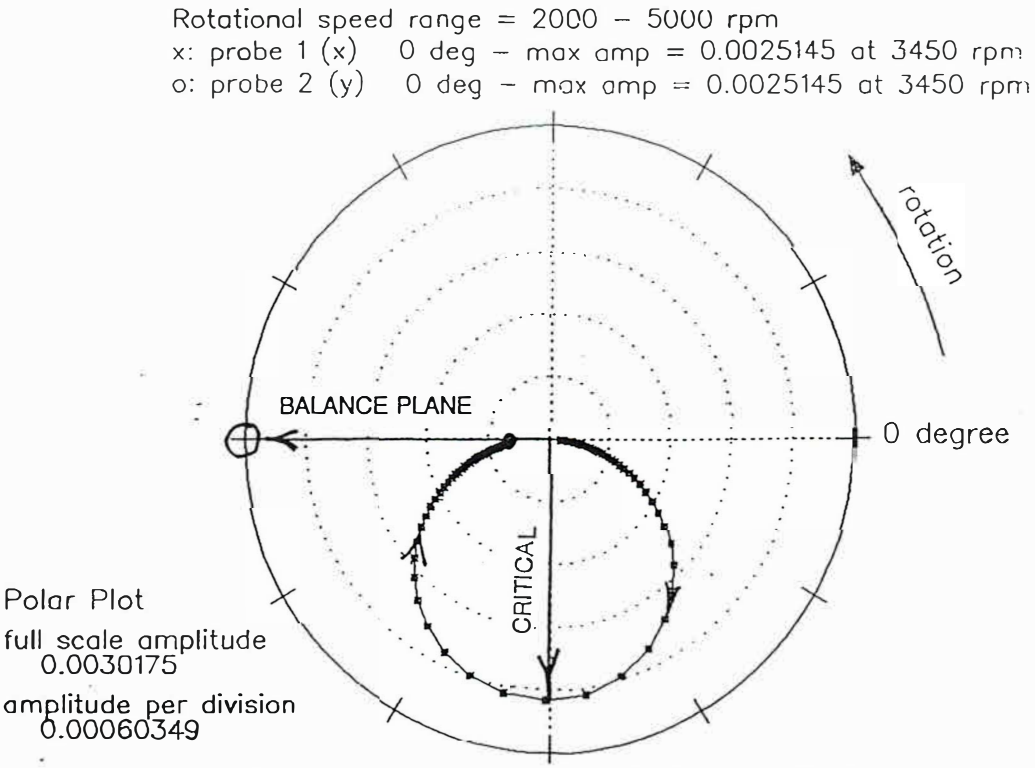

Figure 4.10 Polar Plot of Horizontal Motion at Shaft Center

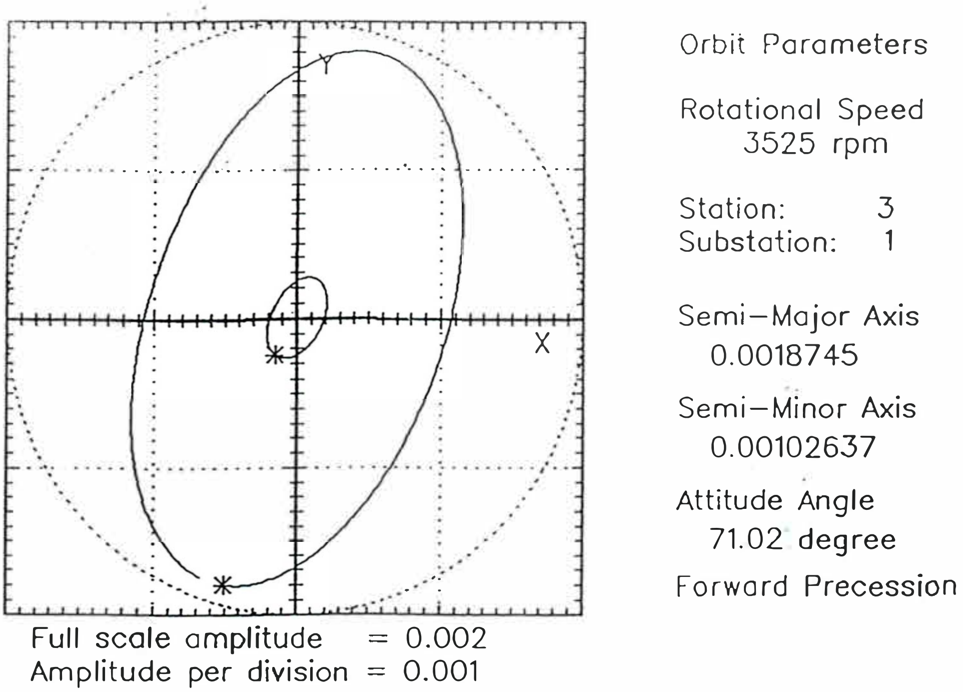

Orbit Parameters

Rotational Speed
3525 rpm

Station: 3
Substation: 1

Semi–Major Axis
0.0018745

Semi–Minor Axis
0.00102637

Attitude Angle
71.02 degree

Forward Precession

Full scale amplitude = 0.002
Amplitude per division = 0.001

Figure 4.11 Compressor and Journal Orbits at 3,525 RPM

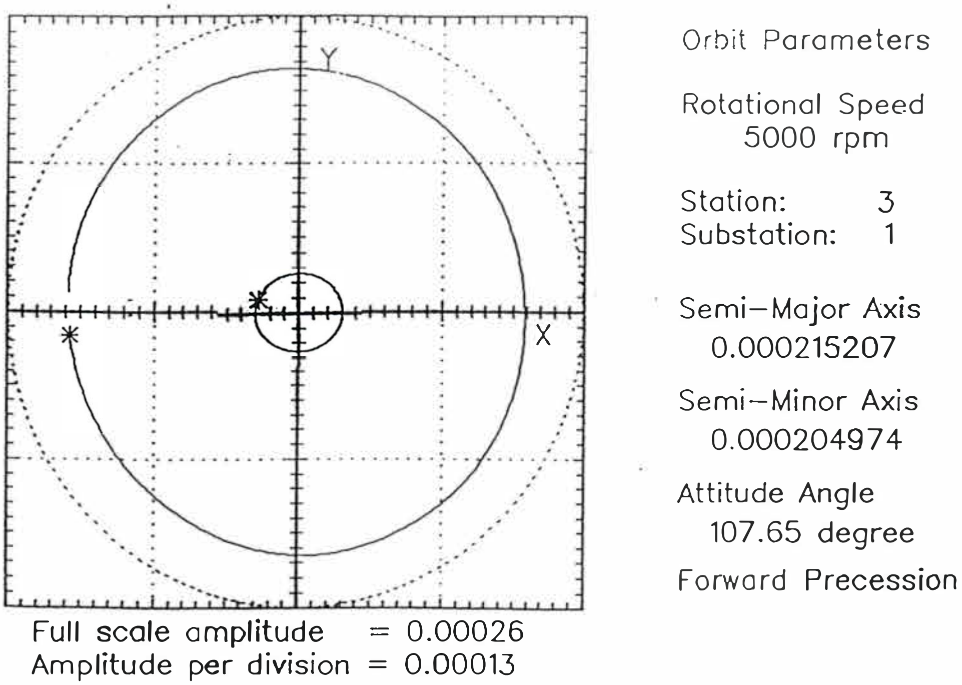

Orbit Parameters

Rotational Speed
5000 rpm

Station: 3
Substation: 1

Semi–Major Axis
0.000215207

Semi–Minor Axis
0.000204974

Attitude Angle
107.65 degree

Forward Precession

Full scale amplitude = 0.00026
Amplitude per division = 0.00013

Figure 4.12 Compressor and Journal Orbits at 5,000 RPM